INSTALLATION MANUAL

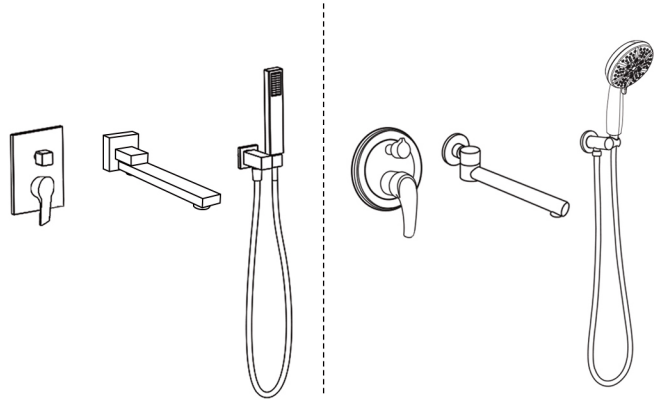

Note: The installation method of the round spout is the same with the square one

1、New installations

NOTE!!!

1. Supply lines should be purged to clean impurities before connecting the unit.
2. The hot water supply should be connected to the left and the cold water supply to the right, when viewed from the operating position. If this is not taken into account can cause permanent damage to the cartridge.
3. Screw connections and test for leaks.
4. Using a spirit level on the cams, the mixer align horizontally, vertically and parallel to the wall.
5. Warm reminder:
   In the cold areas or the indoor temperature is less than 39°F in Winter, if no using the faucets for a long time, please turn off the inlet water valve and drain the remaining water inside the supply pipe, which can avoid the faucet damage caused by the expansion of the frozen water.

2、Installation Preparation

1. Read the instructions carefully before installing.
2. The installation must be performed by a qualified person
3. Installation tools:

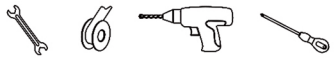

3、Accessory list

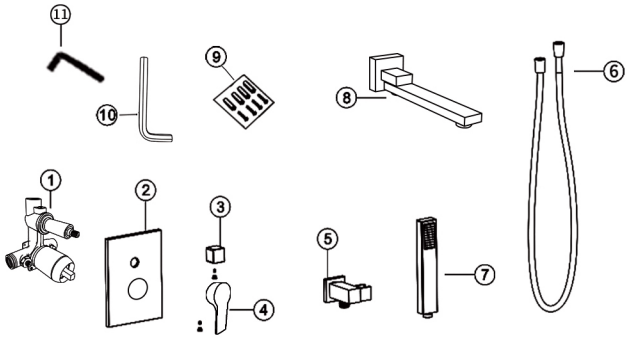

No	Description	Qty
1	Pressure balanced valve	1
2	Cover board	1
3	Diverter knob	1
4	Cartridge handle	1
5	Hand shower holder	1
6	Shower hose	1
7	Hand shower	1
8	Tub spout	1
9	Screws bag	1
10	Allen wrench	1
11	Allen-key	1

4、Pressure-balanced valve

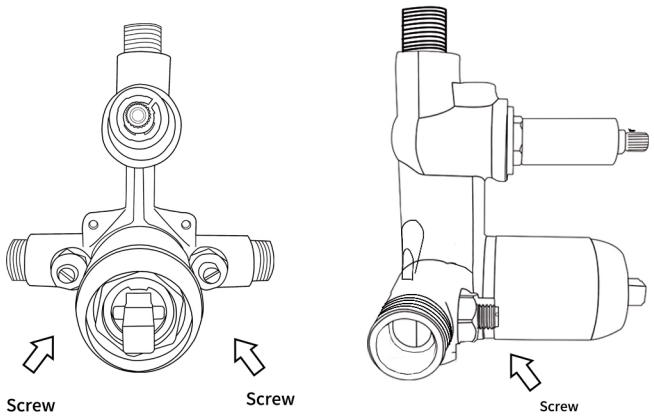

1.) The both side screws can be screwed deeper to adjust the water flow

2.) When the cartridge need to be change, just screw the screws deepest, so that you do not need to turn off the main switch of your water

5、Chiseling wall diagram

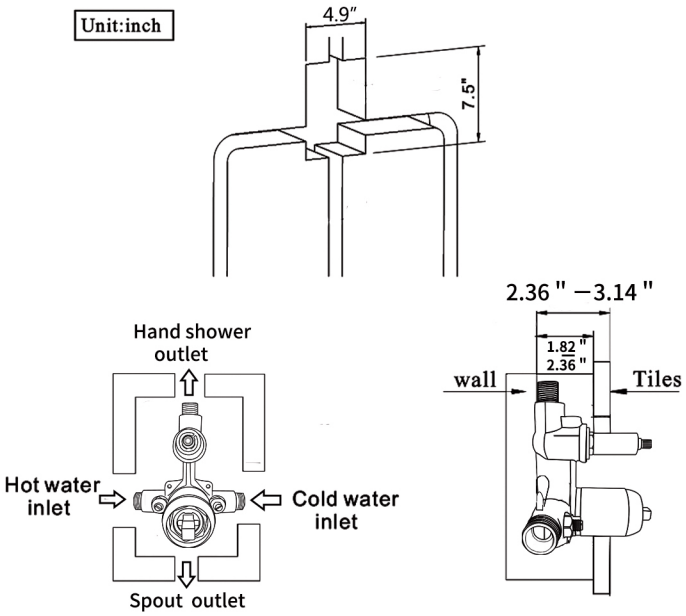

6、Pipe-connection diagram

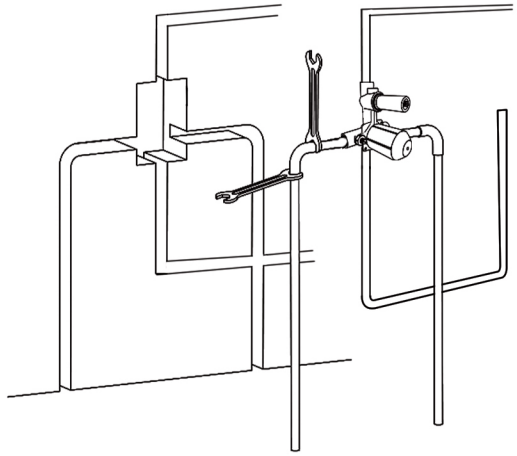

7、Water test and leak detection

1. After connecting all pipes, please dis-assembling the plastic protection cover, and switch on/off the cartridge, check all connections without any leakage, and all connections connecting to the required functional outlets.
2. Re-install the plastic protection cover to the valve.

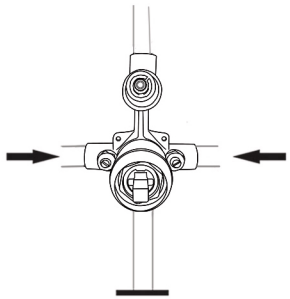

8、Wall tiling program

1. Use aparallel ruler to make sure the wall and valve being parallel.

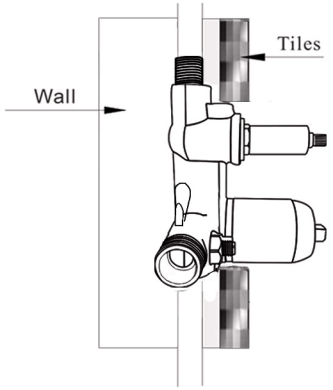

9、Cover and handle installation

1. Take off the plastic protection cover.
2. Put the cover board on the valve and tight the handle firmly

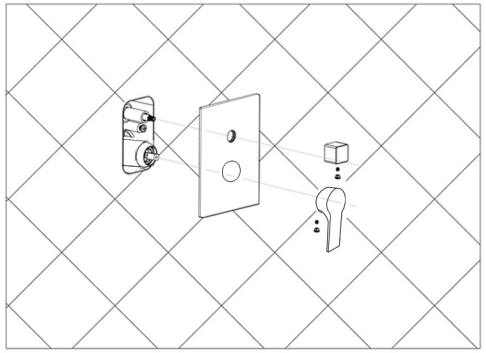

10、Spout installation

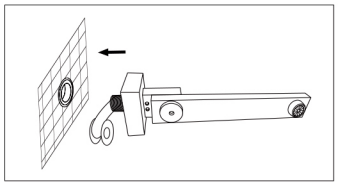

OR

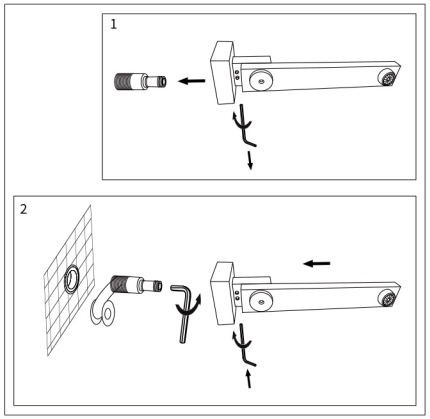

1. Loose the screws and remove the adapter.

2. Twist some teflon tape on the thread of the adapter then screw the adapter to the water pipe with allan wrench.

Insert the spout to the adapter then lock it with screws.

11、Shower installation

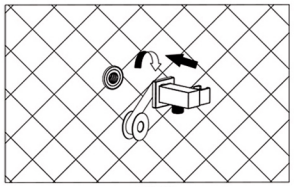

OR

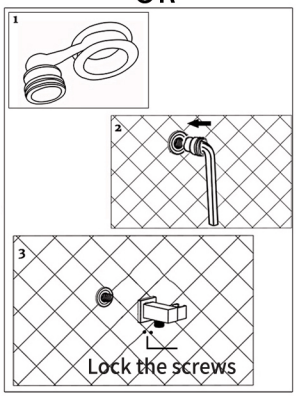

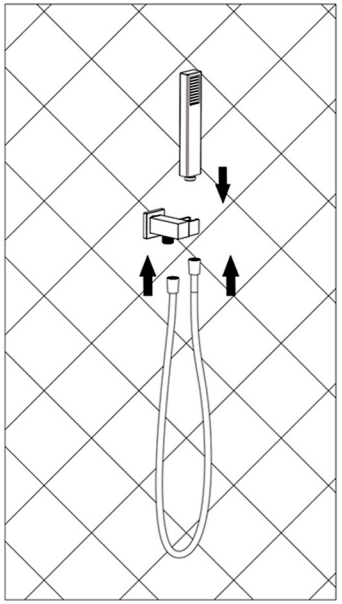

12、Important notice

1. If must taken the cartridge off, please make sure the blue D-shape washers still on the cartridge!
2. Otherwise, water can not be shut off after installation.

13、Cleaning & Maintenance

1. Flush with clean water& dry with soft cloth only.
2. If any dirt, clean with soft liquid or transparent glass detergent.
3. Do not use any scrubbing detergent, polisher, sand-cloth, paper tissue or scraper.
4. Do not use acid detergent, insoluble&grain-like detergent or soap.