MODEL: VOLCANO EPX PRO

VOLCANO EPX PRO

1/10 SCALE MONSTER TRUCK OWNERS MANUAL

Redcat®

FAST AFFORDABLE FUN™

MAN-VOLCANOEPX-2017-2-15

•To ensure that you are using the most recent version of this manual:
www.redcatracing.com/manuals/VOLCANOEPXPROMANUAL.pdf
•To ensure that you have the most recent version of the Electric Vehicles Manual:
www.redcatracing.com/manuals/ELECTRIC-MANUAL.pdf

WARNING!

READ ALL INSTRUCTIONS INCLUDED WITH VEHICLE BEFORE OPERATING

AGE WARNING!
This radio controlled (RC) vehicle is not a toy! You must be 14 years of age or older to operate this vehicle. Adult supervision is required.

RISK OF RUNAWAY VEHICLE OR INJURY!
Never turn on the vehicle or plug in the battery pack without first having the controller turned on.

RISK OF FIRE! / RISK OF EXPLOSION!
There is a risk of fire and explosion when dealing with batteries. Rechargeable batteries may become hot and catch fire if left unattended or charged too quickly. Use extra caution when charging LiPO batteries. Use only LiPO specific chargers. Use a LiPO safe charging pouch when charging LiPOs. Charge away from flammable materials. Never charge at a rate higher than 1C. {2000Mah pack= 2amps charge rate). Overcharging can lead to fire and explosion. Always store battery packs in a cool dry place.

RISK OF BURNS!
The batteries, electronic speed controller (ESC), electric motor, and other areas of the vehicle can get hot. Burns can occur if touched after vehicle operation. Allow adequate time to cool before handling.

RISK OF ELECTRICAL SHOCK!
Use caution when charging batteries. Do not touch positive and negative leads together. Do not lay battery on metal. Use only chargers specified for the battery type being charged. Keep batteries and chargers away from water.

RISK OF INJURY!
Hobby grade RC vehicles can cause serious injury or death if not operated correctly. Never use vehicle in crowds. Never chase people or animals. Drive in safe open areas only. Keep body parts away from moving parts.

RISK OF DAMAGE!
Never operate RC vehicles on public roads. Damage of vehicle and property can occur. Only operate on open private property. Never charge the battery pack while it is still plugged into the RC vehicle. Always unplug the battery pack from the electronic speed controller (ESC) and remove the battery from the RC vehicle before charging. Failure to do so will result in damage to the vehicle's electronics.

WARNING!
Do not mix old and new batteries. Do not mix alkaline, lithium, standard (carbon zinc), or rechargeable (nickel cadmium) batteries. Do not change or charge batteries in a hazardous location.

FCC Compliance Statement! The radio included with your vehicle complies with part 15 of the FCC Rules. Operation is subject to the following two conditions: (1) This device may not cause harmful interference, and (2) This device must accept any interference received, including interference that may cause undesired operations. Note: This equipment has been tested and found to comply with the limits for a Class B digital device, pursuant to Part 15 of the FCC Rules. These limits are designed to provide reasonable protection against harmful interference in a residential installation. This equipment generates, uses and can radiate radio frequency energy and, if not installed and used in accordance with the instructions, may cause harmful interference to radio communications. However, there is no guarantee that interference will not occur in a particular installation. If this equipment does cause harmful interference to radio or television reception, which can be determined by turning the equipment off and on, the user is encouraged to try to correct the interference by one of the following measures:

Reorient or relocate the receiving antenna.
Increase the separation between the equipment and receiver.
Connect the equipment into an outlet on a circuit different from that to which the receiver is connected.
Consult the dealer or an experienced radio/TV technician for help.

WARNING: Any changes or modifications not expressly approved by the party responsible for compliance could void the user's authority to operate this equipment.

WARNING: While operating the Radio, a separation distance of at least 20 centimeters must be maintained between the radiating antenna and the body of the user or nearby persons in order to meet the FCC RF exposure guidelines.

FEATURES & SPECIFICATIONS

- Electric Brushless 3300KV RC-540 Motor
- Brushless ESC (2S LIPO Ready)
- 4 Wheel Drive
- Oil Filled Shocks
- 7.4V LIPO Battery
- LIPO Charger Included
- 2.4GHz Radio System
- Scale: 1/10
- Length: 400mm
- Width: 310mm
- Height: 185mm
- Wheelbase: 275mm
- Ground Clearance: 30mm

VEHICLE OVERVIEW

A: On/Off Switch

B: Motor

C: ESC

D: Receiver

E: Steering Servo

F: Steering Linkage

G: Battery

H: Battery Hold Down

I: Battery Connector

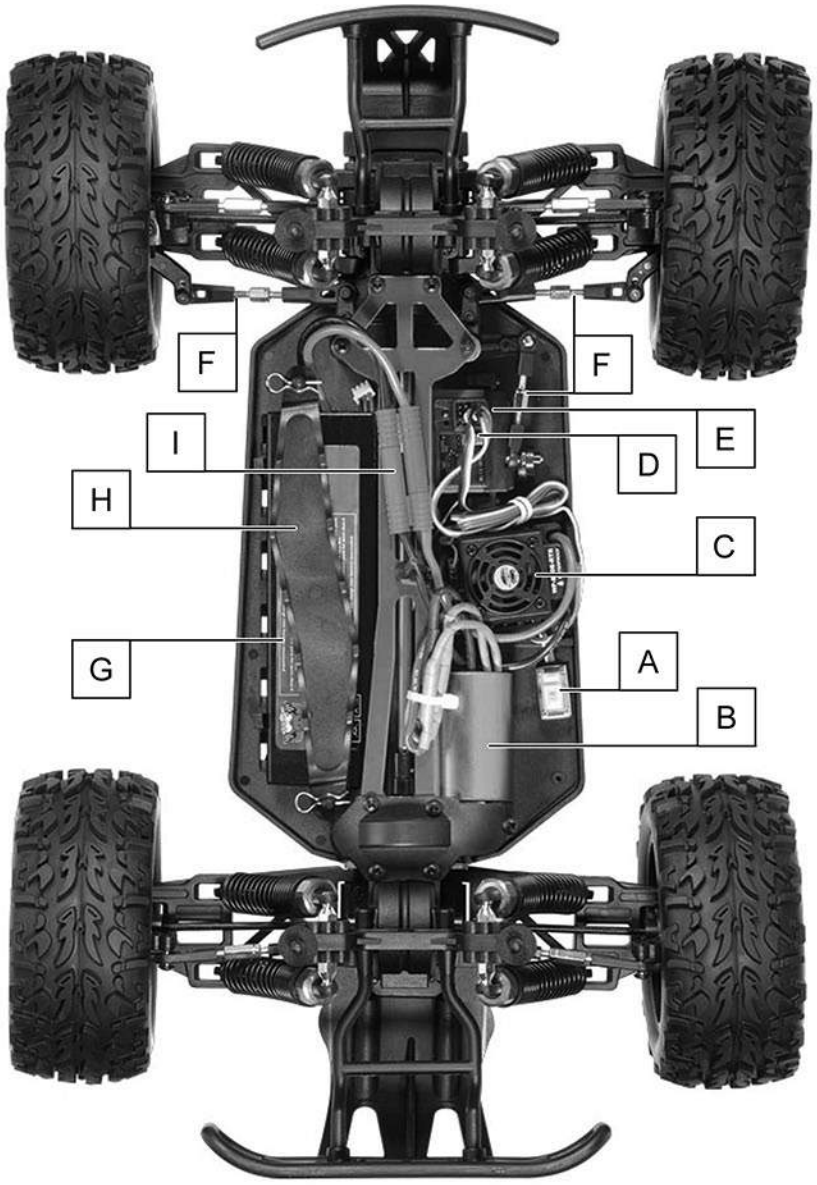

RADIO GUIDE

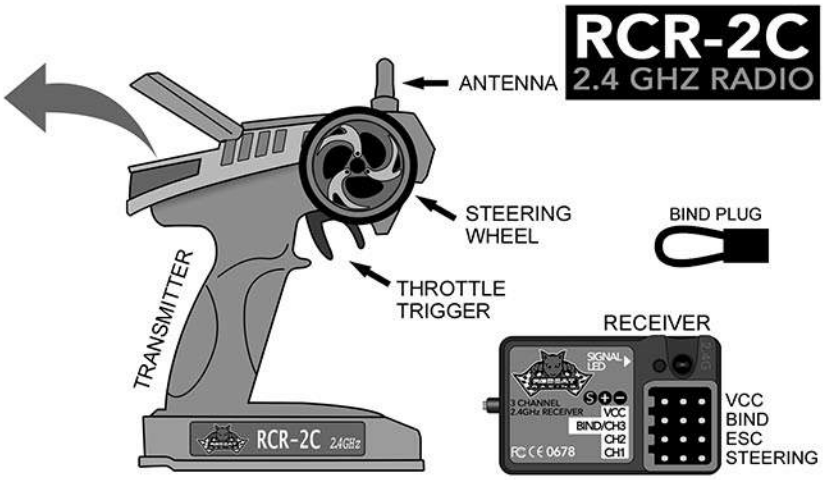

Steering Reverse Switch: Top left switch. Used to change steering orientation. If the car turns right when you steer left, flip this switch.

Throttle Reverse Switch: Top right switch. Used to change throttle trigger orientation. If the car goes in reverse while you pull the throttle trigger, flip this switch.

Power LED: Left LED light. Lights up when the transmitter is turned on.

Battery Level LED: Right LED light. Lights up green when transmitter batteries are full. Flashes when transmitter batteries are low and need replacing.

Bind Button: Used to bind the transmitter to the receiver. See binding instructions.

Steering Trim: Left knob. Used to set the steering neutral point. If the vehicle veers in one direction while the steering wheel is centered, turn this knob in the opposite direction until the car drives straight.

Throttle Trim: Middle knob. Used to set the throttle neutral point. If the vehicle moves forward or reverse while the throttle trigger is centered, turn this knob until the vehicle remains still. For maximum setting, turn slowly until the vehicle creeps forward, then turn the knob the opposite direction until the car stops.

Steering Dual Rate: Right knob. Used to limit the amount of steering. 0= little/no steering & 6= maximum steering. Set the knob to the amount of steering you feel comfortable with. If the vehicle has a tendency to spin out, lower the steering rate.

On/Off Switch: Bottom switch. Turns transmitter On and Off.

VCC: Not used.

Bind/Ch3: Used when binding to transmitter. Used for 3rd channel when needed.

Ch2: Used for Electronic Speed Controller.

Ch1: Used for steering servo.

Binding:

1. Insert the BIND PLUG into the receiver BIND port.
2. Make sure your ESC is plugged into CH2, and insert the bind plug into BIND/CH3. Now, power the vehicle on and the receiver light should begin to blink red.
3. Press the BIND button in the center of the transmitter's Control Panel and turn on radio.
4. Release the bind button when you see the green light on the radio flashing. At this point, your receiver's LED should now be solid red. Turn off the power to your vehicle, as well as the radio.
5. Remove the BIND PLUG from the receiver. Make sure the servos and ESC are attached as described above.
6. First turn your radio on, then your vehicle as normal. Your radio and receiver should be bound together and communicating with each other.

LIPO CHARGER

Specifications: HX-A3 Charger

- AC input : 100-240V
- Charges LiPo batteries: 2S - 3S
- Charge current: 900mAh x 3
- Two output ports: 1x2S, 1x3S LiPo Balance ports

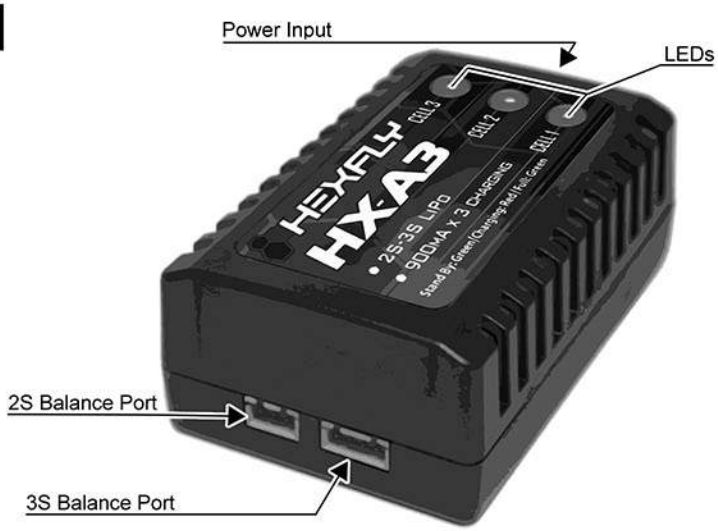

- ATTENTION -

When plugging the battery pack into the ESC, make sure the plugs are lined up correctly!

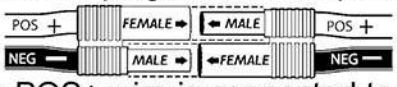

Ensure POS+ wire is connected to POS+ & NEG- is connected to NEG-

Charging Instructions:

1. Plug the charger into an AC power supply (100-240V)
2. Once connected to a power supply, all the LED lights will turn green.
3. Plug in a 2S or 3S LiPo battery, that has been unplugged and removed from the RC vehicle, into the corresponding balance port. 2S for 2S battery packs & 3S for 3S battery Packs. NOTE: LiPo batteries have 2 plugs on them, 1x main plug (large plug used to plug into the RC car) & 1x balance plug (small white plug used for charging). ENSURE THE LARGE MAIN PLUG IS DISCONNECTED FROM THE VEHICLE AND ISN'T PLUGGED INTO ANYTHING WHILE CHARGING THE BATTERY WITH THE HX-A3 CHARGER!
4. LED lights will turn red. This means the battery is charging.
5. LED lights turn green when the corresponding battery cells are fully charged. When all LEDs are green, the battery pack is completely charged.
6. Unplug the battery pack from the charger.
7. Unplug the charger from the power supply.

⚠ Warnings:

- Unplug battery from ESC and remove battery from vehicle **BEFORE** plugging battery into charger.
- Do Not plug the battery into a vehicle while the battery is plugged into the charger. Damage to the ESC and charger may occur.
- Read the entire manual carefully before attempting to plug in or attempting to use the charger.
- Keep charger, included hardware, and batteries away from water, corrosive gases, dust, and damp environments.
- Only charge LiPo batteries. Cell count: 1 x 2S or 1 x 3S
- Do not attempt to charge 2S and 3S batteries at the same time, one or the other!
- Incorrect connections may cause permanent damage to batteries, charger, property, and persons.
- Only use included cables, adapters, and accessories, as others may cause permanent damage to batteries, charger, property, and persons.

Warranty Info:

This product includes a 90 day warranty against factory defects. Warranty starts at date of purchase and the original product receipt is necessary for all warranty claims. This warranty does not cover improper use or any use other than specified as proper use in this manual.

Volcano EPX PRO

EXPLODED VIEW

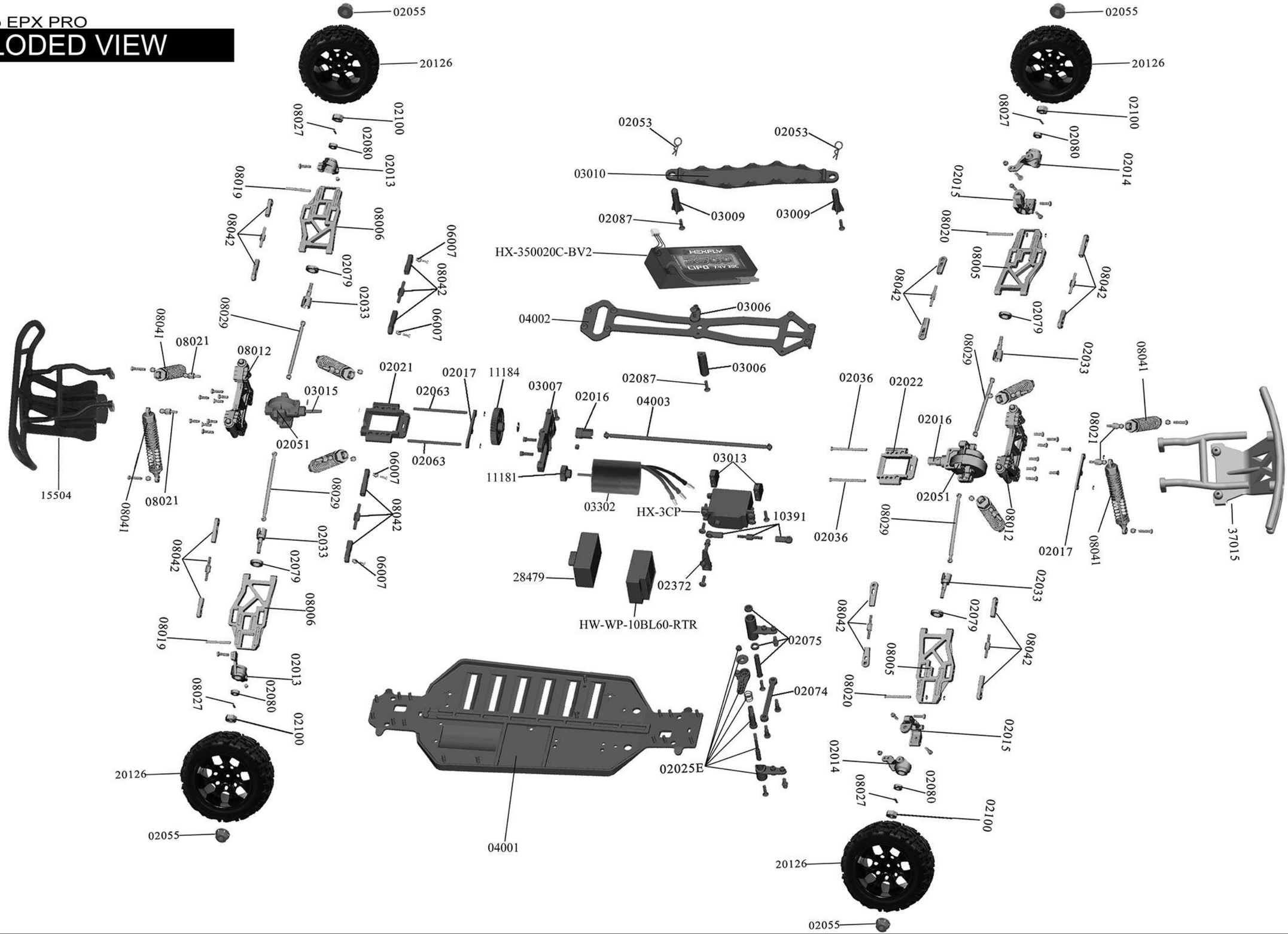

EXPLODED VIEWS

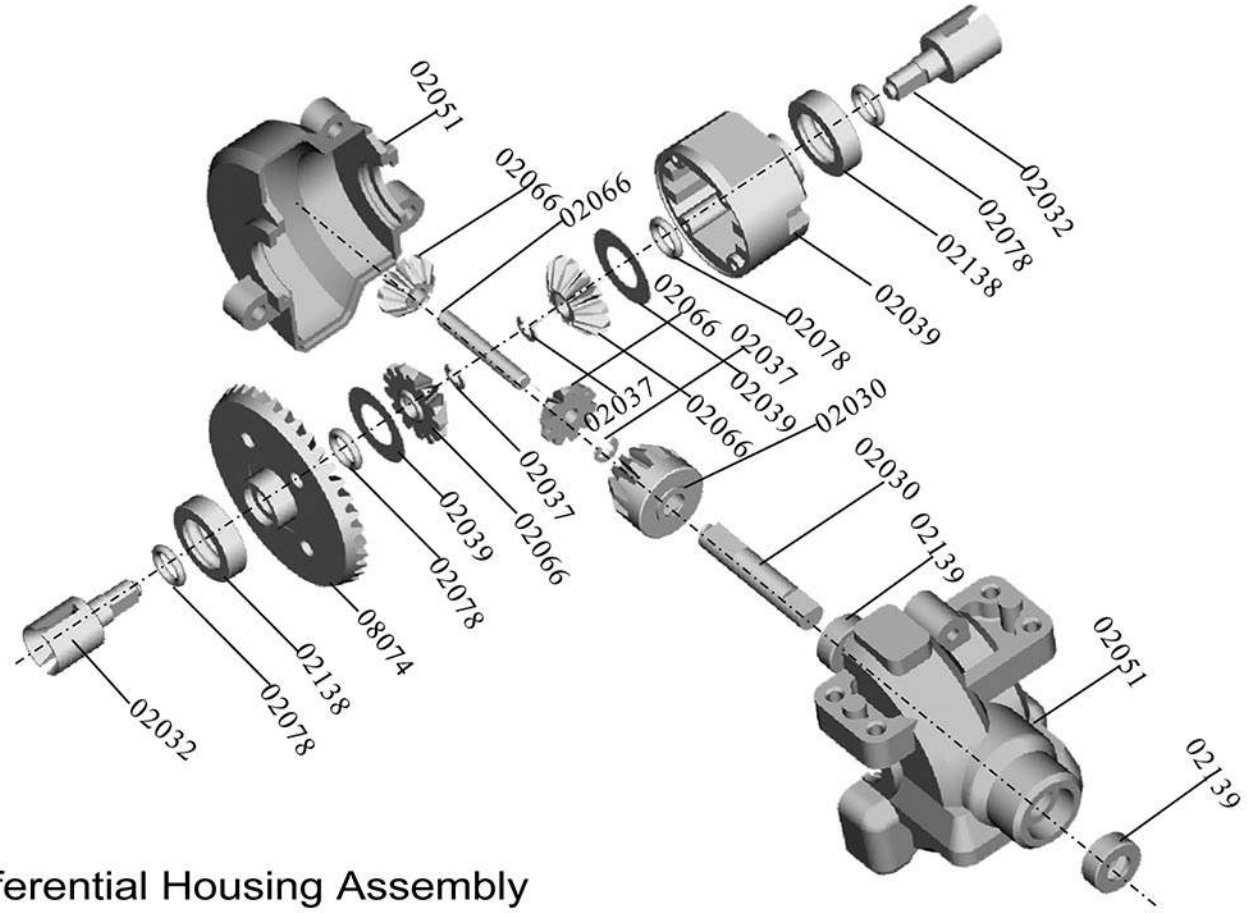

Differential Housing Assembly

PARTS IDENTIFICATION

08005- Front Lower Suspension Arm	08006- Rear Lower Suspension Arm	02014-Steering Hubs (L/R)	02015-Front Hub Carrier(L/R)	02013-Rear Upright+ Set Screws
02033-Wheel Axle	02016-Universal Joint Cup B+ Grub Screw	02032-Universal Joint Cup C	02021-Rear Suspension Arm Holder	02022-Front Suspension Arm Holder
15504 - Rear Bumper	37015 - Front Bumper	08012- Fron/Rear Shock Tower	08041-Aluminum Shock Absorber	03302-Brushless Motor KV:3300

PARTS IDENTIFICATION

HW-WP-10BL60-RTR - Hobbywing 60A Brushless Speed Controller	03007-Motor Mount	04001-Chassis	04002-Upper Chassis Brace	03013-Radio Tray Mounts
03010-Battery Strap	HX-350020C-BV2 3500mAh 20C 7.4V 2S LIPO Battery	HX-A3 - Hexfly LIPO Charger (2S or 3S)	03009-Battery Cover post	02074-Steering Joint
02025E-Servo Saver Set	02075-Steering Assembly B	03401-Gear Cover	02053-R- Clip	11184-Diff. MainGear (64T) Metal
11181-Pinion Gear Metal (21T)	08074-Crown Gear (38T) (Copper infiltration)	02030-Drive Gear	02024-Diff.Gear Complete	03015-Drive Shaft+ E-Clip
02066-Diff.Planetary Gears + Pin	02039-Differential Box (W/ 2 Shims + Washers)	02051-Gear Box	10391-Servo Link	08042-Front/Rear Link
08007- Body Post	08029-Dogbones 90mm Front/Rear qty 2	08027- Pin 2*10	08019- Rear Lower Arm Pin B 3*30mm	08020- Front Lower Arm Pin B 3*33mm
02036-Front Lower Arm Pins A 3*44mm	02063-Rear Lower Arm Pin A 3*54mm	04003-Center Dogbone	02057-Antenna Pipe	03006-Antenna Mount
02372-Servo Arm	02017-Suspension Reinforcement Brace	20126-Wheel/Tire Set qty 2	02095-M3*8 Column Head Machine Screw 4P	02093-M3*10 Column Head Machine Screw 10P

PARTS IDENTIFICATION

02096-3*10 Cap Head Machine Screw 6P	02097-Cap Head Machine Screw 3*14 6P	08024- Washer Screw M3*11 8P	02083-Cap Head Self-Tapping Screw3*12 6P	02081-Cap Head Self-Tapping Screw 3*8 6P
02101- Steering Bushing	02082-Cap Head Self-Tapping Screw3*10 10P	02100- Wheel Hex.	02085-Round Head Self-Tapping Screw 2*8 8P	02037-E-Clip (Φ7Φ4Φ2.5Φ 2.3)
02139-Ball Bearing 10*5*4	02138-Ball Bearing 15*10*4	02078-Differential O-Ring	02079-Bushing 15*10*4	02080-Bushing 5*10*4
06007-Shock Swivel Ball Insert	02055-M4 Nylon Lock Nut	02102- M3 Nylon Lock Nut	08021- Upper Shock Ball Studs	01083-Round Head Machine Screw 3*11 6P
06023-Shock Ball Studs B Female Thread	02038-Ball Studs	02099- Grub Screw M4*4	02098- Grub Screw M3*4	02127-M3*14 Grub Hex. Screw 10P
02087-Countersunk Cross Head Self-Tapping Screw3*10 15P	02088-Countersunk Cross Head Self-Tapping Screw3*14 13P	02089-Countersunk Cross Head Self-Tapping Screw3*15 9P	02086-Round Head Self-Tapping Screw 2*10 10P	02092-ISO 3*10 Screw 8P
81220-5-Flat Head Machine Screw 3*14 4P	28479- 2.4GHz Receiver	RCR-2CNR- 2.4GHz Transmitter	HX-3CP- Hexfly 3Kg Servo	

OPTIONAL PERFORMANCE PARTS

HX-500025C-BV2 - 5000mAh 25C 2S 7.4V LIPO Battery	HX-580030C-BV2 - 5800mAh 30C 2S 7.4V LIPO Battery	03404-Brushless Motor KV:2724	02191B-Aluminum Lock Nut M3 (Blue)	102049-Aluminum Nut M4
11184-Diff. MainGear (64T) Metal	11188-Diff.Main Gear (48T)	11185-Pinion Gear(15T)	11149-Pinion Gear Metal (19T)	102261-Aluminum Rear Gear Box Mount
HX-403 - Hexfly LIPO or LiFe 2S-4S Balancing Charger	102227-Suspension Arm Brace(AL.)	102040-Aluminum Ackerman Plate	102260-Aluminum Front Gear Box Mount	103013-Servo Mount(AL.) +Flat Head Machine Screw 3*8*2P+Cap Head Machine Screw3*8* 4P 3*8 3*8
02132P-Aluminum Front Hub Carrier(L/R) +Flat Head Machine Screws 3*15mm*2P 3*15	02131P-Steering Hub (L/R)(AL.)+Cap Head Machine Screws 3*12* 2P/3*11mm*2P 3*11 3*12	02130P-Aluminum Rear Hub Carrier(L/R)+Flat Head Machine Screws 3*15mm*2P+M4*4 Grub Hex. Screw 2P 4*4 3*15	02134-Aluminum Wheel Hex	02191P-Aluminum Nut M3 (Purple)
102049-Aluminum Nut M4	06048-Front & Rear Servo Link (AL) + Flat Head Machine Screws 3*14mm*4P + Nut M3*4P M3 3*14	08046-Universal Drive Joint	08055-Front Lower Arm (AL) + Flat Head Machine Screws 3*10*4P 3*10	08056-Rear Lower Arm (AL) + Flat Head Machine Screws 3*10*4P 3*10
08054-Aluminum Shock Tower + Cap Head Machine Screws 3*12*2P 3*12	08047-Aluminum Body Posts	103009-Aluminum Battery Posts+Flat Head Machine3*10*2P 3*10	102057-Aluminum Servo Saver Set	108835-Aluminum Front Brace+Cap Head Machine Screws 3*8mm *6P 3*8
HUK-1B -Aluminum Hop-Up Kit (Blue)	HUK-1P -Aluminum Hop-Up Kit (Purple)	103071-Motor Brace (AL.)+Flat Head Machine Screw 3*8*4P/ Cap Head Machine Screw 3*8*2P M3*8 M3*8	107001-Carbon Fibre Chassis	108836-Aluminum Rear Brace+Cap Head Machine Screws 3*8mm * 4P/3*10mm*2P 3*10 3*8

FAST AFFORDABLE FUN

www.redcatracing.com

Follow us on FaceBook: https://www.facebook.com/RedcatRacing

MAN-VOLCANOEPX-2017-2-15

•To ensure that you are using the most recent version of this manual:
www.redcatracing.com/manuals/VOLCANOEPXPROMANUAL.pdf
•To ensure that you have the most recent version of the Electric Vehicles Manual:
www.redcatracing.com/manuals/ELECTRIC-MANUAL.pdf