Comfort, Quality & Style Since 1998

FireSense®

# Sporty Portable Gas Fire Pit

Item#: 62133 — Mocha
Item#: 62907 — Bronze

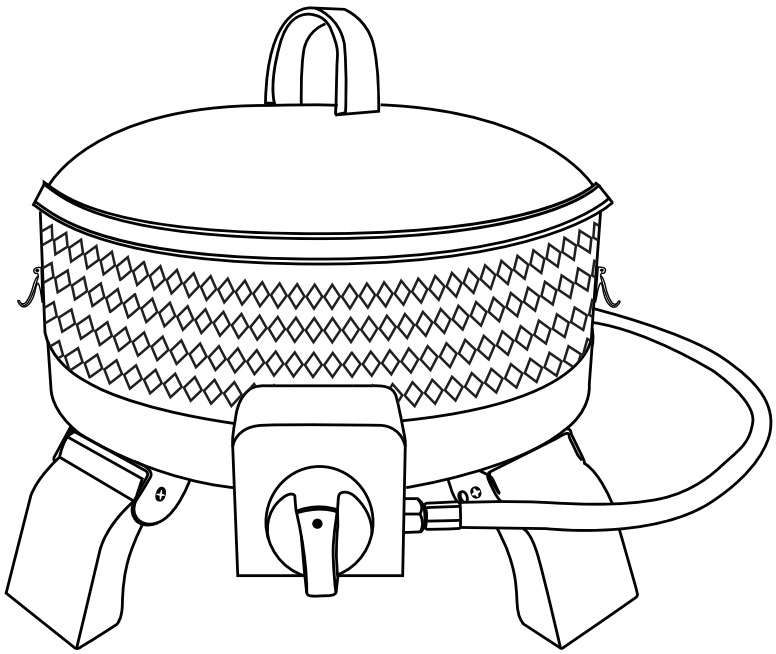

**WARNING**
**FOR YOUR SAFETY**

If you smell gas:
1. Shut off gas to the appliance
2. Extinguish any open flame
3. If odor continues, immediately call gas supplier.

**WARNING**
**FOR YOUR SAFETY**

Do not store or use gasoline or other flammable vapors or liquids in the vicinity of this or any other appliance.

**WARNING**

For Outdoor Use Only

**WARNING**

This product can expose you to chemicals including Carbon Monoxide, Lead, Chromium (hexavalent compounds), Di(2-ethylhexyl) phthalate (DEHP) and Diisononyl phthalate (DINP), which are known to the State of California to cause cancer and birth defects or other reproductive harm. For more information, go to www.P65Warnings.ca.gov.

**ATTACH YOUR RECEIPT HERE**

Keep a copy of your proof of purchase or order confirmation which will be needed if you need to contact us about warranty coverage.

Purchase Date: _____

## Questions, problems, missing parts?

Before returning to your retailer, our exceptional customer service is available.

Call us toll-free at **(866) 985-7877**, email us at **cservice@welltraveled.net**, or go online and live chat at **www.wtliving.com**. Our hours are: **9 a.m. – 6 p.m., EST, Monday – Friday**.

*Manual updated Apr 2019*

# TABLE OF CONTENTS


| | |
|---|---|
| Table of Contents | Page 2 |
| Before You Begin | Page 2 |
| Package Contents | Page 3 |
| Safety Information | Page 4 |
| Assembly | Page 5-6 |
| Operating Instructions | Pages 7-10 |
| Care and Maintenance | Page 11 |
| Troubleshooting | Page 12 |
| Warranty Information | Page 13 |


## BEFORE YOU BEGIN

Please read and understand this entire manual before attempting to assemble, operate or install this appliance. If you have any questions regarding the product, please call us toll-free at **(866) 985-7877**, email us at **cservice@welltraveled.net**, or go online and live chat at **www.wtliving.com**. Our hours are: **9 a.m. – 6 p.m., EST, Monday – Friday.**

This manual contains important information about the assembly, operation and maintenance of this gas fire pit. General safety information is presented in the first few pages and is also located throughout this manual. Keep this manual for future reference and to educate new users of this appliance.

# PACKAGE CONTENTS

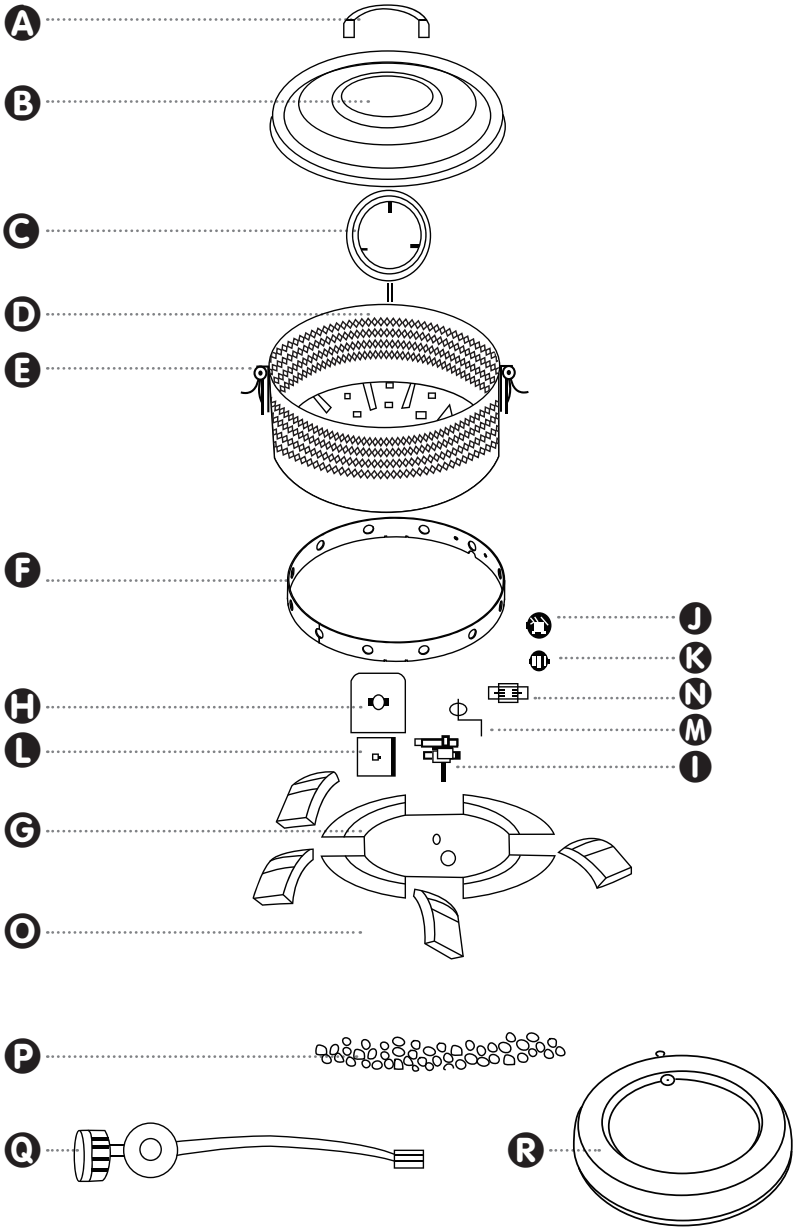


| PART | DESCRIPTION | QUANTITY |
|---|---|---|
| A | Handle | 1 |
| B | Lid | 1 |
| C | Fire Ring | 1 |
| D | Fire Bowl | 1 |
| E | Buckle | 2 |
| F | Fire Bowl Base | 1 |
| G | Isolation Plate | 1 |
| H | Ignition Box | 1 |
| I | Control Valve | 1 |
| J | Valve Base | 1 |
| K | Ignition Button | 1 |
| L | Isolation Plate Support | 1 |
| M | Ignition Needle | 1 |
| N | Ignition Cap | 1 |
| O | Folding Leg | 4 |
| P | Lava Rocks | 3.3 lbs |
| Q | Regulator/Hose Assembly | 1 |
| R | Tank Stand | 1 |

## SAFETY INFORMATION

This appliance has been tested to and complies with the ANSI Z21.97-2014, Outdoor Decorative Gas Appliances CGA CR 97-003 Outdoor Gas Fireplaces. The installation must conform to local codes or in the absence of local codes to the National Fuel Gas Code. ANSI Z223.1. This manual contains important information about the assembly, operation and maintenance of this fire pit. General safety information is presented in these first few pages and is also located throughout the manual. Keep this manual for future reference and to educate new users of this product. This manual should be read in conjunction with the labeling on the product. Safety precautions are essential when any mechanical or propane fueled equipment is involved. These precautions are necessary when using, storing, and servicing. Using the equipment with the respect and caution demanded will reduce the possibilities of personal injury or property damage. The symbols shown on this page are used extensively throughout this manual. Always heed these precautions, as they are essential when using any mechanical or propane fueled equipment.

## DANGER / WARNING

DANGER/WARNING indicates an imminently hazardous situation which, if not avoided, will or can result in death or serious injury.

## WARNING

Failure to comply with the precautions and instructions provided with this fire pit can result in death, serious bodily injury and property loss or damage from hazards of fire, explosion, burn, asphyxiation, and/or carbon monoxide poisoning. Only persons who can understand and follow the instructions should use or service this fire pit.

## WARNING

Do not store or use gasoline or other flammable vapors and liquids in the vicinity of this or any other appliance. An LP-cylinder not connected for use shall not be stored in the vicinity of this or any other appliance.

## WARNING

Solid fuels shall not be burned in this appliance.

## WARNING

**BURN HAZARD**

Never leave fire pit unattended when hot or in use. Keep out of reach of children.

## WARNING

Improper installation, adjustment, alteration, service or maintenance can cause property damage, injury or death. Read the installation, operation and maintenance instructions thoroughly before installing or servicing this equipment.

## DANGER

EXPLOSION—FIRE HAZARD

- Keep solid combustibles, such as building materials, paper, or cardboard a safe distance away from the fire pit as recommended by the instructions.
- Provide adequate clearances around air openings into the combustion chamber. Never use the fire pit in spaces which do or may contain volatile or airborne combustibles, or products such as gasoline, solvents, paint thinner, dust particles, or unknown chemicals.
- During operation, this appliance can be a source of ignition. Keep fire pit area clear and free from combustible materials, gasoline, paint thinner, cleaning solvents and other flammable vapors and liquids. Do not use fire pit in areas with high dust content. Minimum fire pit clearances from combustible materials: 2 feet (24 inches) from the sides, rear, and front; 6 feet (72 inches) from ceiling.
- Never store propane near high heat, open flames, pilot lights, direct sunlight, other ignition sources or where temperatures exceed 120° F (49° C).
- Propane vapors are heavier than air and can accumulate in low places. If you smell gas, leave the area immediately.
- Never install or remove a propane cylinder while the fire pit is lit, or near flame, pilot lights, or other ignition sources or while fire pit is hot to the touch.
- This fire pit is red hot during use and can ignite flammables too close to the burner. Keep flammables at least 6 feet (72 inches) from top and 2 feet (24 inches) from sides. Keep gasoline and other flammable liquids and vapors well away from fire pit.
- Store the propane cylinder outdoors in a well ventilated space out of the reach of children. Never store the propane cylinder in an enclosed area (house, garage, etc.). If fire pit is to be stored indoors, disconnect the propane cylinder for outdoor storage.

## WARNING

- This fire pit is fueled by propane gas. Propane gas is invisible, odorless, and flammable. An odorant is normally added to help detect leaks and can be described as having a "rotten egg" smell. The odorant can fade over time so leaking gas is not always detectable by smell alone.
- Propane gas is heavier than air and leaking propane will sink to the lowest level possible. It can ignite by ignition sources including matches, lighters, sparks, or open flames of any kind many feet away from the original leak. Use only propane gas set up for vapor withdrawal.
- Store or use propane gas in compliance with local ordinances and codes or with ANSI/NFPA 58. Turn off propane when not in use.

## DANGER

FOR YOUR SAFETY — If you smell gas:

1. Shut off gas to the appliance.
2. Extinguish any open flame
3. If odor continues, keep away from the appliance and immediately call your gas supplier or fire department.

## WARNING

We cannot foresee every use which may be made of our fire pit. Check with your local fire safety authority if you have questions about fire pit use. Other standards govern the use of fuel gases and heat producing products for specific uses. Your local authorities can advise you about these. If no local codes exist, follow National Fuel Gas Code, ANSI Z223.1. In Canada, installation must conform to local codes. If no local codes exist, follow the current National standards of CANADA CAN/CGA-B 149.2.

## WARNING:

**FOR OUTDOOR USE ONLY**

**CARBON MONOXIDE HAZARD**

- This fire pit is a combustion appliance. All combustion appliances produce carbon monoxide (CO) during the combustion process. This product is designed to produce extremely minute, non-hazardous amounts of CO if used and maintained in accordance with all warnings and instructions. Do not block air flow into or out of the fire pit.
- Carbon Monoxide (CO) poisoning produces flu-like symptoms, watery eyes, headaches, dizziness, fatigue and possibly death. You can't see it and you can't smell it. It's an invisible killer. If these symptoms are present during operation of this product get fresh air immediately!
- For outdoor use only. Using this fire pit in an enclosed space can kill you. Never use this fire pit in an enclosed space such as a camper, tent, home, or other unventilated or enclosed area.

- This fire pit consumes air (oxygen). Do not use in unventilated or enclosed areas to avoid endangering your life.

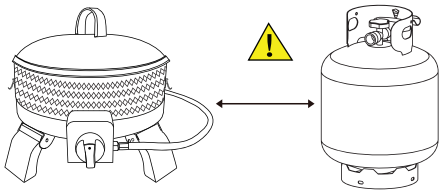

**Minimum clearance to adjacent combustible surfaces: Sides - 24", Top - 72"**
**Solid fuels shall not be burned in this appliance.**

## PREPARATION

Before beginning assembly, be sure to empty contents of carton and make sure all parts are present. If any parts are missing, please contact Customer Service at (866)-985-7877, Monday-Friday, 9 a.m. - 6 p.m. EST or email at cservice@welltraveled.net.

Place all parts on a soft, level surface for assembly.
Estimated Assembly Time: 15 Minutes | DO NOT over tighten hardware!

**1** Locate the **Folding Legs Ⓞ** on the underside of the fire pit. To release the legs, firmly push down the lock button located at the base of the leg. Move the leg into the upright position until it clicks into place. Repeat for all four legs ensuring they are all securely in the locked position and place the fire pit right-side-up.

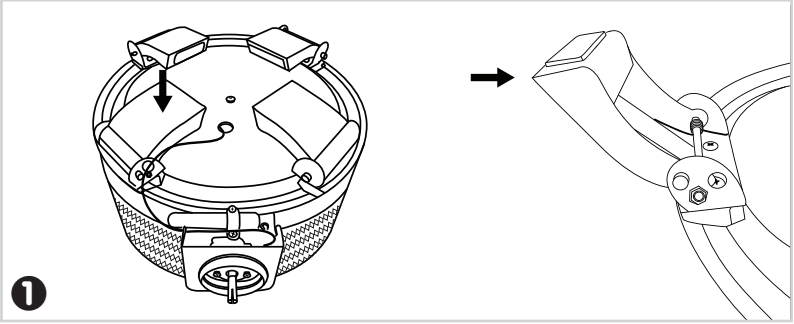


**2** When storing the fire pit, locate the **Folding Legs Ⓞ** on the underside of the fire pit. To fold the legs, firmly push down the lock button located at the base of the leg. Move the leg into the folded position until it clicks into place. Repeat for all four legs ensuring they are all securely in the locked position.

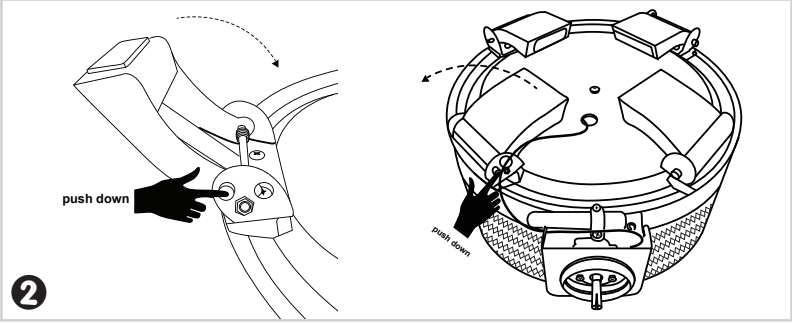


**3** Assemble the **Control Valve Ⓘ** by inserting the **Ignition Cap Ⓝ** onto the **Ignition Needle Ⓜ**.

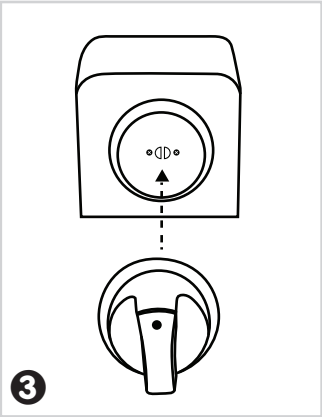


**4** Assemble the **Handle Ⓐ** on the **Lid Ⓑ** using the provided screws and lock washers.

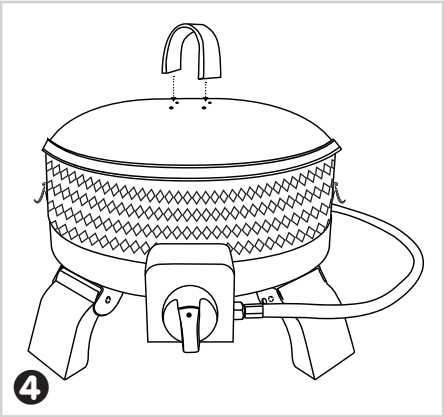

**5** Add the **Lava Rocks Ⓟ.**

**6** Connect the **Hose** and **Regulator Ⓠ** to the LPG cylinder.

**7** Place cylinder in the **Tank Stand Ⓡ** and tighten the screw at the base of the stand.

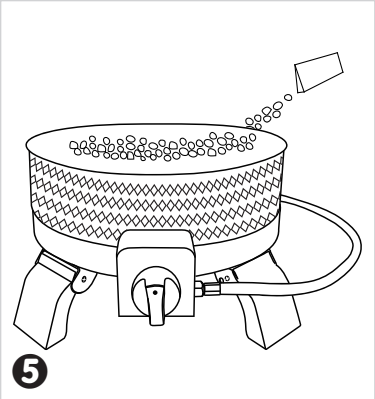


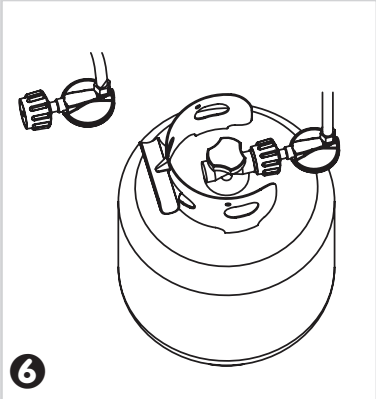


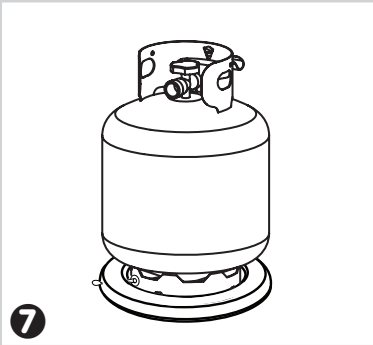


Use this fire pit only with a propane vapor withdrawal supply system. See Chapter 5 of the standard for storage and handling of liquefied petroleum gas, ANSI/NFPA 58. Your local library or fire department should have this book. Storage of an appliance indoors is permissible only if the cylinder is disconnected and removed from the appliance. A cylinder must be stored outdoors in a well-ventilated area out of reach of children. A disconnected cylinder must have dust caps tightly installed and must not be stored in a building, garage or any other enclosed area. The maximum inlet gas supply pressure: 250 psi. The minimum inlet gas supply pressure: 5 psi. The minimum hourly of 10,000 BTU is required input rating for a fire pit for automatic operation at rating less than full input rating. The pressure regulator and hose assembly supplied with the appliance must be used. The installation must conform with local codes, or in the absence of local codes, with national fuel gas code, ANSI Z223.1/NFPA54, natural gas and propane Installation Code,CSA B149.1, or propane storage and handling code, B149.2.

A dented, rusted or damaged propane cylinder may be hazardous and should be checked by your cylinder supplier. Never use a propane cylinder with a damaged valve connection.

The propane cylinder must be constructed and marked in accordance with the specifications for LPG cylinders of the U.S. Department of Transportation (DOT) or the standard for cylinders, spheres and tubes for transportation of dangerous goods and commission, CAN/CSA-B339.

The cylinder must be equipped with a listed over-filling prevention device.

The cylinder must have a connection device compatible with the connection for the appliance.

The cylinder used must include a collar to protect the cylinder valve.

Never connect an unregulated propane cylinder to the heater.

Attach regulator to cylinder. Complete attachment.

Secure the propane cylinder with the cylinder screw by tightening the screw until it comes in contact with the cylinder.

- Do not store a spare LPG cylinder under or near this appliance;
- Never fill the cylinder beyond 80 percent full;
- Place the dust cap on the cylinder valve outlet whenever the cylinder is not in use. Only install the type of dust cap on the cylinder valve that is provided with the cylinder valve. Other types of caps or plugs may result in leakage of propane.

Attention: THIS PRODUCT IS NOT FOR COMMERCIAL USE INTENDED FOR RESIDENTIAL USE ONLY.

Keep children away during assembly. This item contains small parts which can be swallowed by children.
Do not use indoors or inside any enclosure.
Retain the assembly instructions for future reference.
Installer - Please leave these instructions with the owner.

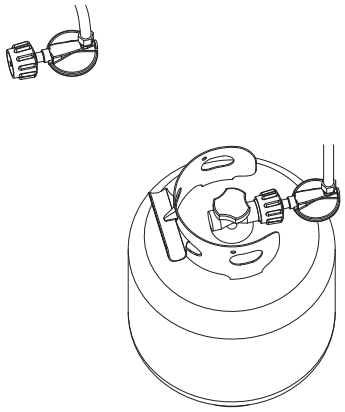

**WARNING**

FOR YOUR SAFETY
Be careful when attempting to manually ignite this fire pit. Holding in the control knob for more than 10 seconds before igniting the gas will cause a ball of flame upon ignition.

**WARNING**

FOR YOUR SAFETY
Fire pit will be hot after use.
Handle with care.

**LEAK CHECK**

WARNING:

- Perform all leak tests outdoors.
- Extinguish all open flames.
- NEVER leak test when smoking.
- Do not use the fire pit until all connections have been leak tested and do not leak.

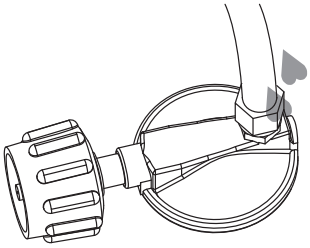

**Hose / Regulator Connection**

**Underside of Burner**

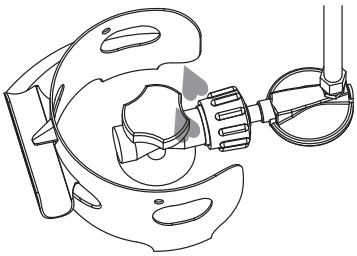

**Regulator / Cylinder Connection**

1. Make 2-3 oz. of leak test solution (one part liquid dishwashing detergent and three parts water).
2. Apply several drops of solution where hose attaches to regulator.
3. Apply several drops of solution where regulator connects to cylinder.
4. Make sure all valves are turned OFF.
5. Turn cylinder valve ON.

**If bubbles appear at any connection there is a leak.**

1. Turn cylinder valve OFF.
2. If leak is at hose/regulator connection: tighten connection and perform another leak test. If bubbles continue appearing, the hose should be returned to the place of purchase.
3. If leak is at regulatory/cylinder valve connection: disconnect, reconnect, and perform another leak test. If you continue to see bubbles after several attempts, cylinder valve is defective and should be returned to cylinder's place of purchase.

**If NO bubbles appear at any connection, the connections are secure.**

**NOTE: Whenever gas connections are loosened or removed, you must perform a complete leak test. Complete installation.**

**CAUTION**
Do not attempt to operate until you have read and understand all General Safety Information in this manual and all assembly is complete and leak test has been performed.

**WARNING**

**Very hot while in operation!**
**Never lean over the fire pit while in use. Do not touch the Burner Assembly while the fire pit is in operation. Wait until the fire pit has cooled down after use before placing Lid on Table Top or touching any surfaces. Failure to comply with these instructions may result in serious bodily injury.**

**DANGER!**
**FOR OUTDOOR USE ONLY**

**CARBON MONOXIDE HAZARD**

Never use this inside a house, or other unventilated or enclosed areas. This fire pit consumes air (oxygen). Do not use in unventilated or enclosed areas to avoid endangering your life.

**BEFORE TURNING GAS SUPPLY ON:**

1. Your fire pit was designed and approved for outdoor use only. Do NOT use it inside a building, garage, or any other enclosed area.
2. Make sure surrounding areas are free of combustible materials, gasoline, and other flammable vapors or liquids.
3. Ensure that there is no obstruction to air ventilation. Be sure all gas connections are tight and there are no leaks.
4. Be sure the cylinder is clear of debris. Be sure any component removed during assembly or servicing is replaced and fastened prior to starting.

**BEFORE LIGHTING:**

1. Fire pit should be thoroughly inspected before each use, and by a qualified service person at least annually. If relighting a hot fire pit, always wait at least 5 minutes.
2. Inspect the hose assembly for evidence of excessive abrasion, cuts, or wear. Suspected areas should be leak tested. If the hose leaks, it must be replaced prior to operation. Only use the replacement hose assembly specified by manufacturer.

**LIGHTING:**

1. Turn the control knob to the "OFF" position. (Figure A).
2. Fully open LPG cylinder valve. *Note: For initial start or after any cylinder change, hold Control Knob IN for 2 minute purge air from gas lines before proceeding.*
3. Push in gas control knob and turn counterclockwise to "HIGH" (Figure B) to light the fire pit. If needed, keep depressing and turning control knob counterclockwise until the fire pit lights (you should hear a click sound).
4. After fire pit lights, release control knob. For a lower temperature, turn the control knob counter clockwise towards the "LOW" position (Figure C). To turn off, turn the control knob clockwise to the "OFF" positions (Figure A).

**NOTE: If burner fails to remain lit, all valves should be closed and a waiting period of at least 5 minutes should pass before attempting to light.**

**RE-LIGHTING:**

1. Turn control knob to "OFF".
2. Repeat the LIGHTING steps above.

**WHEN FIRE PIT IS ON:**
Burner will display tongues of blue and yellow flame. These flames should not be yellow or produce thick black smoke, indicating an obstruction of airflow through the burners. The flame should be blue with straight yellow tops. If excessive yellow flame or black smoke is detected, turn off fire pit and consult "Troubleshooting" on page 13.

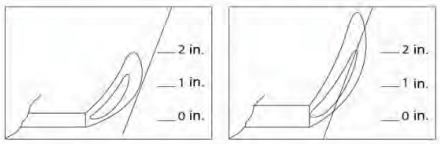

*Normal* *Abnormal*

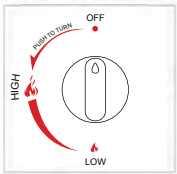

*Figure A*

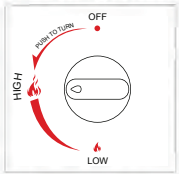

*Figure B*

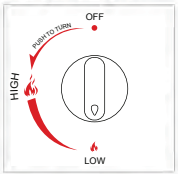

*Figure C*

**OPERATION CHECKLIST:**

For a safe and pleasurable heating experience, perform this check before each use:

**BEFORE OPERATING:**

- ❍ I am familiar with entire owner's manual and understand all precautions noted.
- ❍ All components are properly assembled, intact and operable.
- ❍ No alterations have been made.
- ❍ All gas connections are secure and do not leak.
- ❍ Wind velocity is below 10 mph.
- ❍ Unit will operate at reduced efficiency below 40° F.
- ❍ Fire pit is for outdoor use (outside any enclosure).
- ❍ There is adequate fresh air ventilation.
- ❍ Fire pit is away from gasoline or other flammable liquids or vapors.
- ❍ Fire pit is away from windows, air intake openings, sprinklers and other water sources.
- ❍ Fire pit is at least 2 feet (24 inches) on top and at least 2 feet (24 inches) on sides from combustible materials.
- ❍ Fire pit is on a hard and level surface.
- ❍ There are no signs of spider or insect nests in fire pit orifices.
- ❍ All burner passages are clear.
- ❍ All air circulation passages are clear.
- ❍ Children and adults should be alerted to the hazards of high surface temperatures and should stay away to avoid burns or clothing ignition.
- ❍ Young children should be carefully supervised when they are in the area of the fire pit.
- ❍ Clothing or other protective material should not be hung from the fire pit, or placed on or near the fire pit.
- ❍ Any guard or other protective device removed for servicing the fire pit must be replaced prior to operating the fire pit.
- ❍ Installation and repair should be done by a qualified service person. The fire pit should be inspected before each use and at least annually by a qualified service person.
- ❍ More frequent cleaning may be required as necessary. It is imperative that control compartment, burner and circulating air passageways of the fire pit be kept clean.

**OPERATION INFORMATION AND SAFETY:**

- Unit will operate at reduced efficiency below 40 degrees F.
- Children and adults should be alerted to the hazards of high surface temperatures and should stay away to avoid burns or clothing ignition.
- Young children should be carefully supervised when they are in the area of the fire pit.
- More frequent cleaning may be required as necessary. It is imperative that control compartment burner and circulating air passageways of the fire pit be kept clean and free of debris and/or spider or insect nests.

**SHUT DOWN:**

1. To extinguish burner turn the control knob and continue to turn it clockwise to OFF.
2. Turn cylinder valve clockwise to OFF and disconnect regulator when fire pit is not in use.

**AFTER OPERATION:**

1. Gas control knob is in OFF position.
2. Gas tank valve is OFF.
3. Disconnect gas line.

# CARE & MAINTENANCE

To enjoy years of outstanding performance from your fire pit, make sure you perform the following maintenance activities on a regular basis:

1. Use warm soapy water for cleaning. Never use flammable or corrosive cleaning agents.
2. While cleaning your unit, be sure to keep the area around the burner and control compartment dry at all times. Do not submerge the control valve assembly. If the gas control is submerged in water, do NOT use it. It must be replaced. Make sure fire pit has cooled completely before cleaning or covering with a cover.
   A. Keep the appliance area clear and free from combustible materials, gasoline and other flammable vapors and liquids.
   B. Do not obstruct the flow of combustion and ventilation air.
   C. Keep the ventilation opening(s) of the cylinder enclosure free and clear from debris.
3. Air flow must be unobstructed. Keep controls, burner, and circulating air passageways clean. Signs of possible blockage include:
   - Gas odor with extreme yellow tipping of flame.
   - Fire pit does NOT reach the desired temperature.
   - Fire pit glow is excessively uneven.
   - Fire pit makes popping noise.
   - Spiders and insects can nest in burner or orifices. This dangerous condition can damage fire pit and render it unsafe for use. Clean burner holes by using a heavy-duty pipe cleaner. Compressed air may help clear away smaller particles.
   - Carbon deposits may create a fire hazard. Clean burner screen with warm soapy water if any carbon deposits develop.

***Note:*** *In a salt-air environment (such as near an ocean), corrosion occurs more quickly than normal. Frequently check for corroded areas and repair them promptly.*

**SERVICE:**

Only a qualified service person should repair gas passages and associated components.

***Caution:*** *Always allow fire pit to cool before attempting service.*

**WARNING**

FOR YOUR SAFETY
- Do NOT touch or move fire pit for at least 45 minutes after use.
- Burner is hot to the touch.
- Allow burner to cool before touching.

**STORAGE**:

**Between uses:**
- Turn control knob OFF.
- Disconnect LP source.
- Store fire pit in an area sheltered from direct contact with inclement weather (such as rain, sleet, hail, snow, dust and debris).
- If desired, cover fire pit to protect exterior surfaces and to help prevent build-up in air passages.

**During periods of extended inactivity or when transporting:**
- Turn control knob OFF.
- Disconnect LP source and move to a secure, well-ventilated location outdoors.
- Store fire pit in an area sheltered from direct contact with inclement weather (such as rain, sleet, hail, snow dust and debris).
- If desired, cover fire pit to protect exterior surfaces and to help prevent build-up in air passages. Never leave LP cylinder exposed to direct sunlight or excessive heat.

  **Note:** Wait until fire pit is cool before covering.

# TROUBLESHOOTING

| PROBLEM | POSSIBLE CAUSE | CORRECTIVE ACTION |
|---|---|---|
| Burner will not light | Propane cylinder is empty | Replace propane cylinder |
| | Blockage in orifice | Clear blockage |
| | Control knob is not in ON position | Turn control knob to ON |
| Burner flame is low | Gas pressure is low | Turn cylinder valve OFF and replace cylinder |
| | Outdoor temperature is less than 40°F and tank is less than 1/4 full | Use a full cylinder |
| | Control knob fully ON | Check burner and orifices for blockage |
| Carbon build-up thick black smoke | Dirt or film on burner screen | Clean burner screen |
| | Blockage in burner | Remove blockage and clean burner screen inside and outside. |

# LIMITED WARRANTY

**Customers in the Contiguous US**

This product is warranted for a period of 1 year from original purchase date against defects in materials and workmanship under normal use. This warranty does NOT cover normal wear/weathering, exposure to water, freezing temperatures, oils, fluids, or chemicals, OR use in a commercial application if model is not designated as a commercial model. At Well Traveled Living's sole discretion, products under warranty will be repaired and/or replaced at no charge to the customer. Returns sent back to Well Traveled Living must be sent via prepaid freight in the original retail packaging.

For warranty service, contact Well Traveled Living at the address, phone numbers or website and email listed in this owner's manual. Be sure to have your sales receipt, date of purchase and catalogue/model numbers available when calling. All warranty service will be coordinated by Well Traveled Living's, Amelia Island, Florida service center. This warranty is extended only to the original owner. Proof of purchase will be required before warranty service is rendered. The sales receipt is the only valid proof of purchase. This warranty only covers failures due to defects in materials or workmanship which occur during normal use. Failures and/or damage which result from accident, negligence, misuse, abuse, neglect, mishandling, alteration or modification, failure to maintain, improper assembly or maintenance, service by unauthorized agency or use of unauthorized components or damage that is attributable to acts of God are NOT covered.

This limited warranty gives you specific legal rights and you may also have other rights which vary from jurisdiction to jurisdiction. The provisions of the United Nations Convention on Contracts for the Sales of Goods shall not apply to this limited warranty or the sale of products covered by this limited warranty.

- **THERE ARE NO EXPRESS WARRANTIES EXCEPT AS LISTED**
- **PURCHASER ASSUMES ALL RISKS IN THE ASSEMBLY AND OPERATION OF THIS UNIT**
- **FAILURE TO FOLLOW WARNINGS AND OPERATIONAL INSTRUCTIONS CONTAINED IN THIS MANUAL CAN RESULT IN SEVERE PROPERTY DAMAGE AND/OR PERSONAL INJURY**
- **IN NO EVENT WILL WELL TRAVELED LIVING, OR ITS DIRECTORS, OFFICERS OR AGENTS BE LIABLE TO THE PURCHASER OR ANY THIRD PARTY, WHETHER IN CONTRACT, IN TORT, OR ON ANY OTHER BASIS, FOR ANY INDIRECT, SPECIAL, PUNITIVE, EXEMPLARY, CONSEQUENTIAL, OR INCIDENTAL LOSS, COST, OR DAMAGE ARISING OUT OF OR IN CONNECTION WITH THE SALE, MAINTENANCE, USE, OR INABILITY TO USE THE PRODUCT, EVEN IF WELL TRAVELED LIVING OR ITS DIRECTORS, OFFICERS OR AGENTS HAVE BEEN ADVISED OF THE POSSIBILITY OF SUCH LOSSES, COSTS OR DAMAGES, OR IF SUCH LOSSES, COSTS, OR DAMAGES ARE FORESEEABLE. IN NO EVENT WILL WELL TRAVELED LIVING, OR ITS OFFICERS, DIRECTORS, OR AGENTS BE LIABLE FOR ANY DIRECT LOSSES, COSTS OR DAMAGES THAT EXCEED THE PURCHASE PRICE OF THE PRODUCT.**
- **SOME JURISDICTIONS DO NOT ALLOW THE EXCLUSION OR LIMITATION OF INCIDENTAL OR CONSEQUENTIAL DAMAGES, SO THE ABOVE LIMITATION OR EXCLUSION MAY NOT APPLY TO THE PURCHASER.**

# EXTEND YOUR WARRANTY

When you purchase a Fire Sense, Patio Sense, or Avalon Home product, you have the peace of mind in knowing that it comes with a one-year warranty. Extend your warranty for ***an additional year*** when you write a review of your purchase on **www.wtliving.com** within 365 days of purchase.

## Important Notice

**Do NOT return to place of purchase**—for customer service and warranty issues contact our Customer Service Center at **(866) 985-7877** or **cservice@welltraveled.net**, or go online and live chat at **wtliving.com**. Hours are: **9 a.m. – 6 p.m., EST, Monday – Friday**.

**Distributed by:**
Well Traveled Living
716 S 8th Street, Amelia Island, FL 32034
wtliving.com | cservice@welltraveled.net
(866) 985-7877

Fire Sense,® Patio Sense,® Avalon Home,® Mojave Sun,® Vulcan,® and Well Traveled Living® are registered trademarks of Well Traveled Imports, Inc.® All assembly instruction presentations are the property of Well Traveled Imports, Inc.® and are protected by U.S. copyrights and trademarks. All rights reserved.