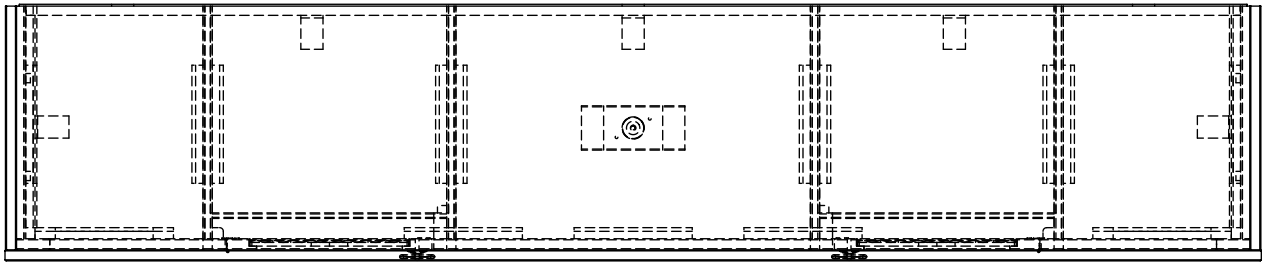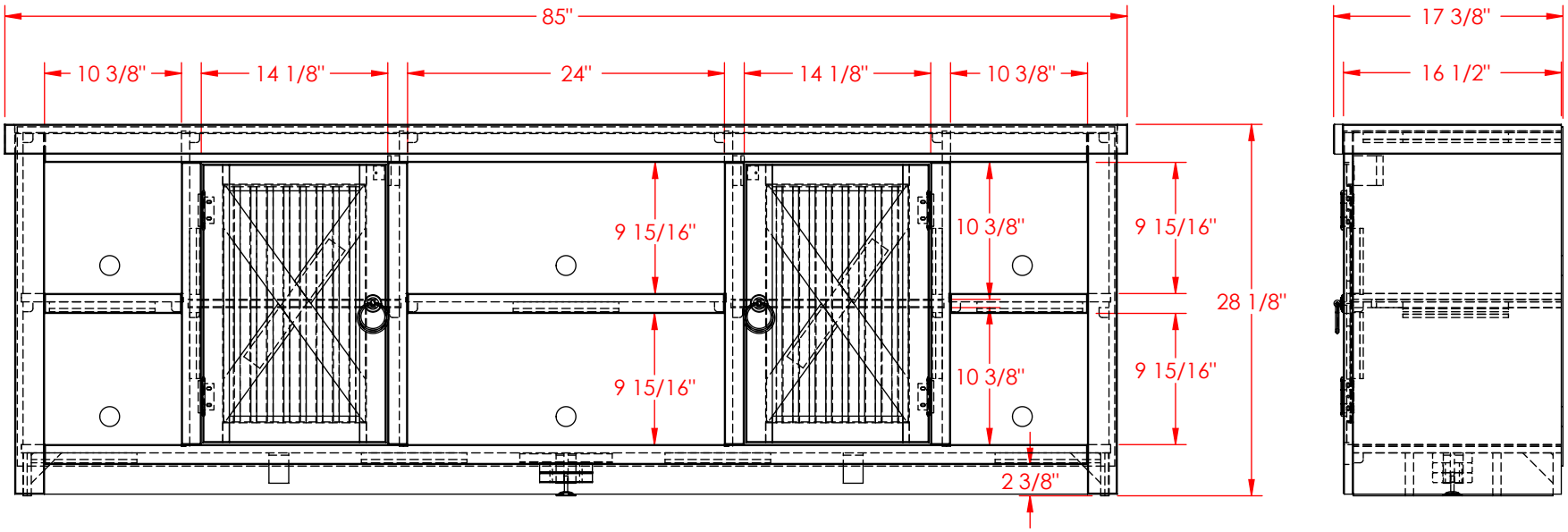Legends Furniture	Part # TL1285	Part Description: TL1285 Telluride TV Console			Date: 05/21/2020
	Material: Assembly	Width: 85"	Height: 28 1/8"	Depth: 17 3/8"	Drawn By: dhoffmann