COSTWAY®

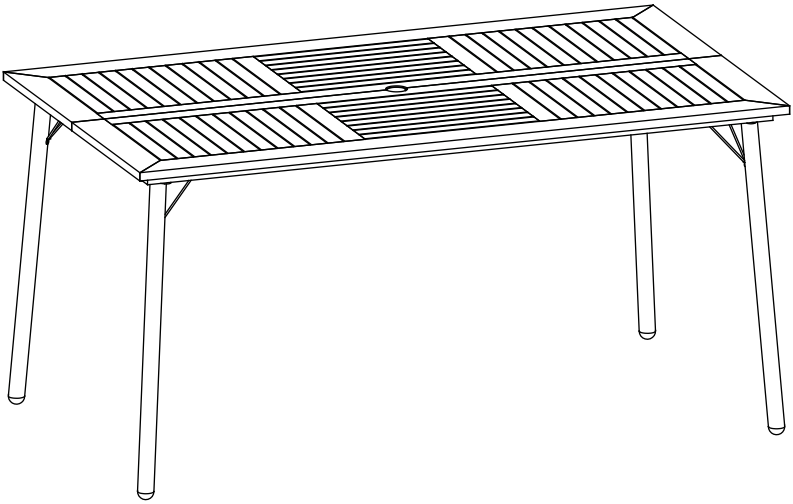

USER'S MANUAL

ACACIA WOOD DINING TABLE
HW65409-13

THIS INSTRUCTION BOOKLET CONTAINS **IMPORTANT** SAFETY INFORMATION. PLEASE READ AND KEEP FOR FUTURE REFERENCE.

COSTWAY

Before You Start

- Read each step carefully before starting. It is very important to ensure each step followed in correct order, otherwise assembly difficulties may occur.
- Most of board parts are labeled or stamped on the raw edges. Have a check to make sure all parts are included.
- Work in a spacious area, preferably on a carpet close to where the unit will be used.
- Keep the handtools close at hand. Do not use power tools to assemble your furniture. They may scratch or damage the parts.

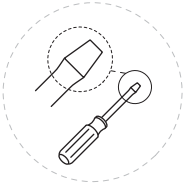
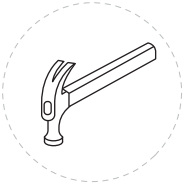
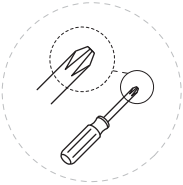
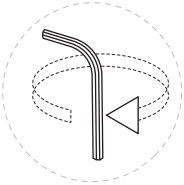

Part List

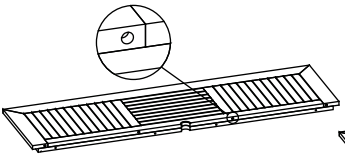

1 x1 pc
A Half Table Top with holes

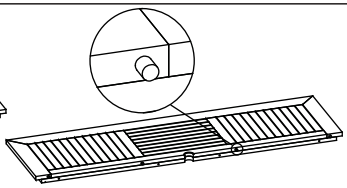

2 x1 pc
A Half Table Top with Iron Dowel

3 x2 pcs
Short Apron

4 x2 pcs
Long Apron

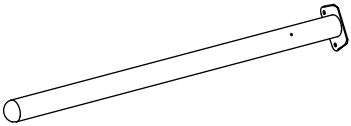

5 x4 pcs
Table Legs

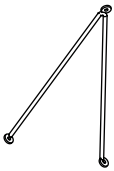

6 x4 pcs
Steel Supporter

7 x1 pc
Parasol Cap

M4x20mm Screw
Ⓐ x8pcs

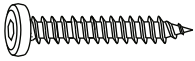

M6x50mm Screw
Ⓑ x16pcs

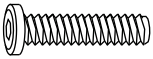

M6x35mm Bolt
Ⓒ x4pcs

M6x15mm Bolt
Ⓓ x12pcs

M4 Allen Key
Ⓔ x2pcs

STEP 1:

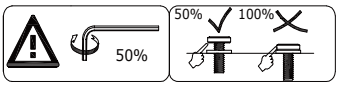

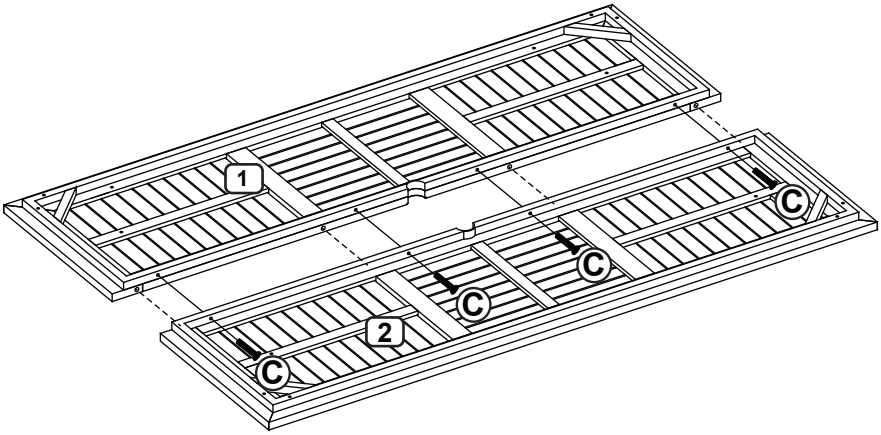

STEP 2:

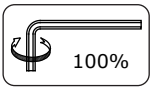

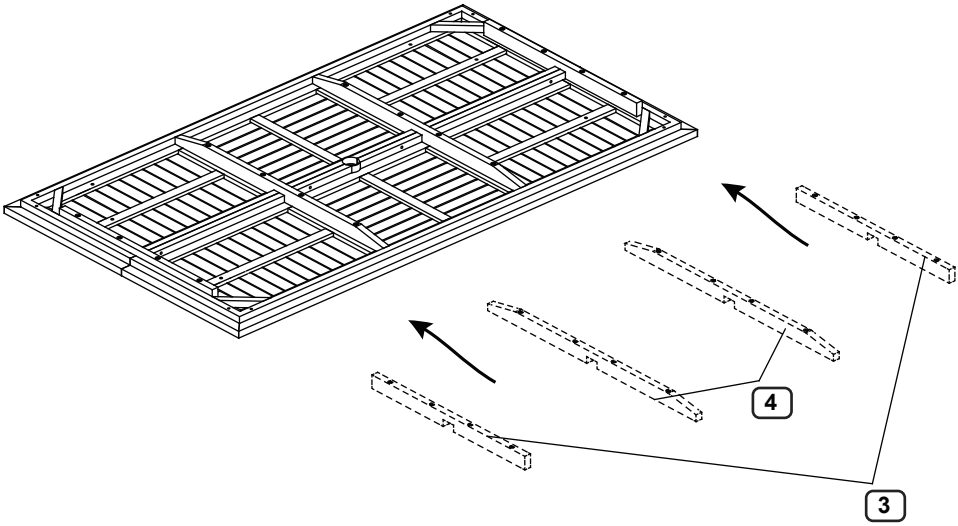

STEP 3:

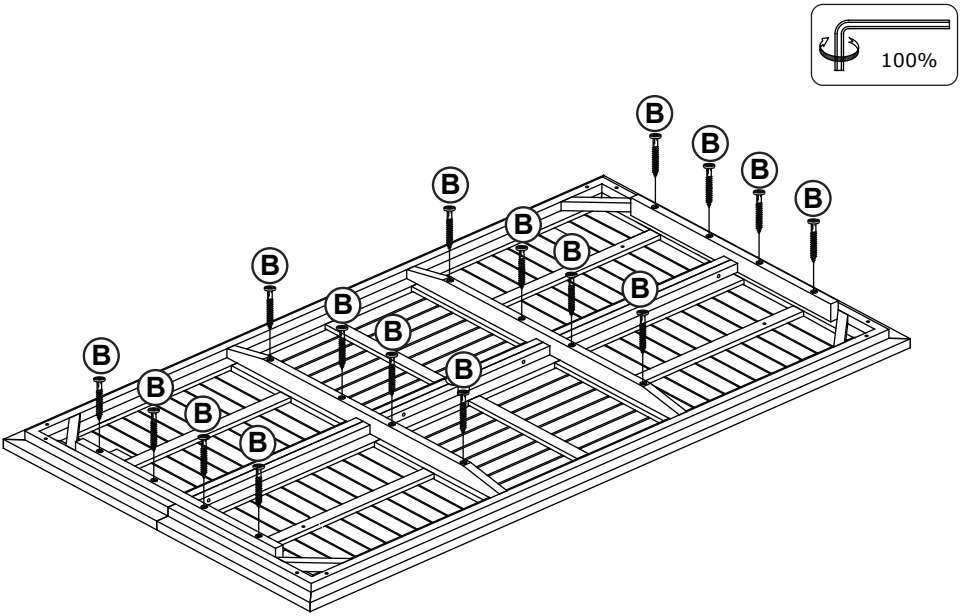

STEP 4:

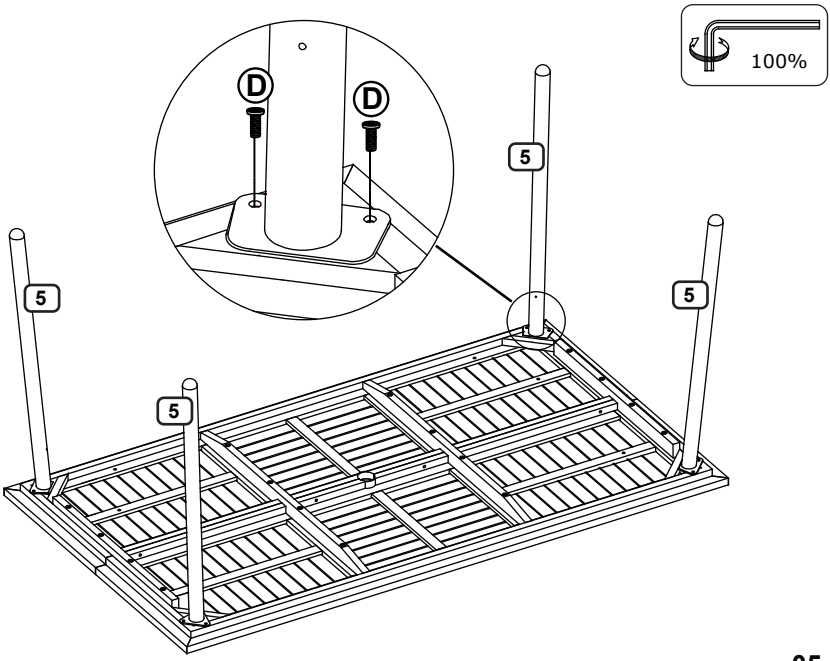

STEP 5:

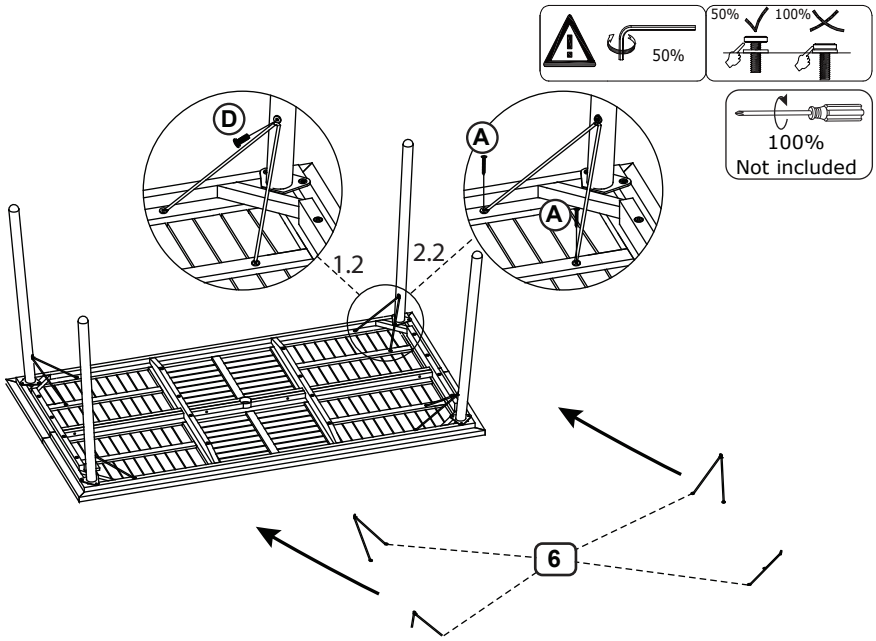

STEP 6:

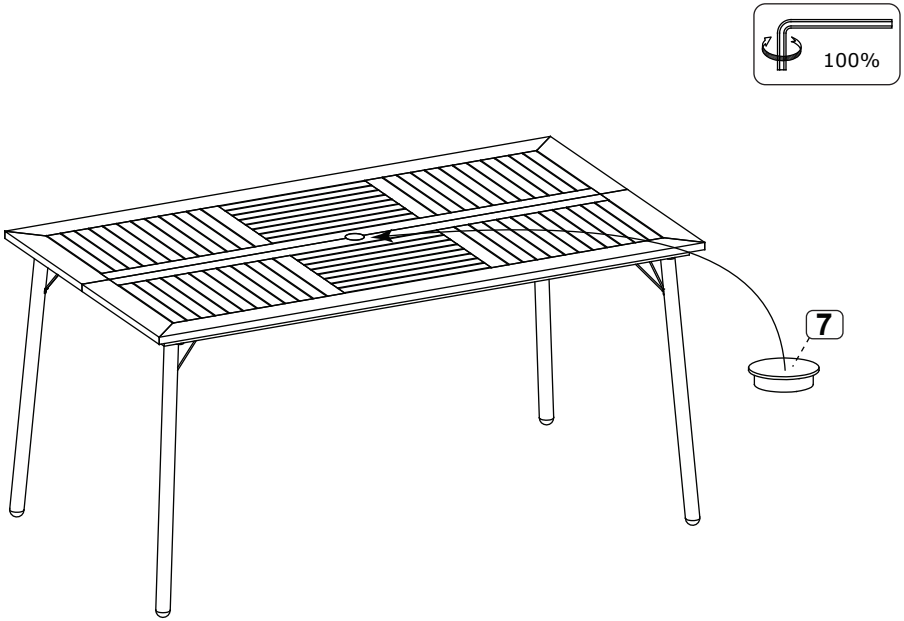

Care and Maintenance

Use a soft, clean cloth that will not scratch the surface when dusting.

Use of furniture polish is not necessary.

Should you choose to use polish, test first in an inconspicuous area.

Using solvents of any kind on your furniture may damage the finish.

Never use water to clean your furniture as it may cause damage to the finish.

Liquid spills should be removed immediately. Using a soft clean cloth, blot the spill gently. Avoid rubbing.

Check bolts/screws periodically and tighten them if necessary.

Further advice about wood furniture care

Please protect your outdoor furniture with a cover when not in use since Long-term sunlight exposure will result in the damage on the surface.

In addition to sunlight damage, wood and metal frame suffers when exposed to extremes in temperature and humidity.

Proper care and cleaning at home will extend the life of your purchase.

Following these important and helpful tips will enhance your furniture as it ages.

Please give us a chance to make it right and do better !

Contact our friendly customer service department for help first.
Replacements for missing or damaged parts will be shipped ASAP !

US office: Fontana UK office: Ipswich AU office: Truganina

COSTWAY®

Contact Us !

Do NOT return this item.

Contact our friendly customer service department for help first.

US:cs.us@costway.com
UK:cs.uk@costway.com
AU:cs.au@costway.com