PRODUCT SPECIFICATIONS

2224DWR • 24” Solid Refrigerator Drawers • 2000 Series

STAINLESS SOLID

INTEGRATED SOLID

INTEGRATED SOLID (HANDLELESS PANEL)*

FEATURES & BENEFITS

PERFORMANCE	• Volume of 4.9 cu ft holds up to 90 bottles (12 oz) or 142 cans (12 oz) • Digital Touch Pad Control is conveniently located on upper face of unit • Temperature range: 34°F - 45°F • Single zone convection cooling system rapidly and efficiently takes items to the set temperature • Wi-Fi ready - Compatible with U-Line U-Connect iOS and Android app
INTERIOR/EXTERIOR	• Black interior is illuminated with LED lighting • Equipped with 2 full-extension robust stainless drawers • Standard commercial stainless steel handle is interchangeable with professional handle accessory • The lower drawer is large enough to fit 2 one-gallon containers with additional space for more storage
INTEGRATION	• Integrated model requires 3/4” custom panel of your choice, or can accept U-Line Euro Style Handleless Stainless Panel Accessory (must be ordered separately) • Fixed grille can accept a custom integrated toe-kick • Four independently adjustable leveling legs provide a precise undercounter fit

MODEL DETAILS

Model	Voltage/Hz	Door Swing	Finish	Shipping Weight
U-2224DWRS-00A	115 / 60	Drawers	Stainless Solid	166 lbs
U-2224DWRINT-00A	115 / 60	Drawers	Integrated Solid	158 lbs

ACCESSORIES

Model	Description	Finish	Shipping Weight
80-54462-00	Professional Drawer Handle, 1 1/4" Diameter	Stainless	2 lb
U-DWRESP60S*	Euro Style Handleless Panel, 24" Solid Drawers (2 panels)	Stainless	14 lb
80-54363-00	Slide And Divide 24" Bin Organizer 2k/3k	N/A	3 lb

*Installs on integrated models.

2000 Series • 24" Solid Refrigerator Drawers • **2224DWR**

DIMENSIONS

Dimensions shown apply to all finishes, including Integrated (INT) models with ¾" integrated panel/frame installed.

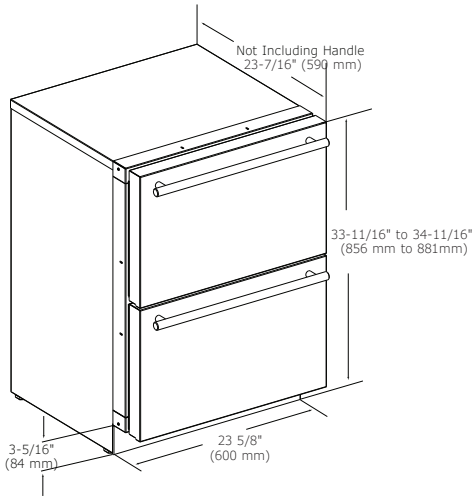

CABINET CUT-OUT

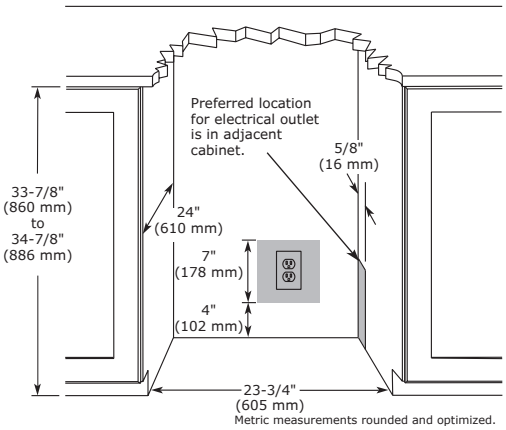

INSTALLATION NOTES

No additional clearance around sides, top or rear of unit is needed for ventilation.
Do not obstruct front grille air flow.

SPECIFICATIONS

Model	2224DWR
Amps: Running	1.2
Capacity: Bottle (12 oz)	90
Capacity: Can (12 oz)	142
Capacity: Volume (cu ft)	4.9
Control Type	Digital Touch Pad
Dimensions: Product Depth	23 7/16" / 590 mm
Dimensions: Product Height	33 11/16" / 856 mm
Dimensions: Product Width	23 5/8" / 600 mm
Energy Consumption: Avg. Per Year	300 kWh
ENERGY STAR	No
Panel Height	14 15/16" / 379 mm
Panel Thickness	¾" / 20 mm
Panel Type	Solid Panel
Panel Width	23 1/2" / 595 mm
Product Weight: Max	156 lbs
Refrigerant Type	R600a
Sabbath (Star K Certified)	Yes
Temperature Range	34°F - 45°F
Wi-Fi Capable	Yes (Production Beginning January 2017)

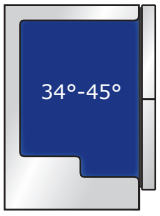

ELECTRICAL REQUIREMENTS

This unit requires a grounded, polarized 115 VAC, 60 Hz, 15 A power supply (normal household current).

Residential

ENERGY STAR

U-Connect
iOS & Android

Warranty

Please visit u-line.com to view this model's User Guide & Service Manual. All Specifications are subject to change without notice.