INSIGNIA™

Quick Setup Guide | NS-C6500-A
In-ceiling speakers

Congratulations on your purchase of a high-quality Insignia product. Your NS-C6500-A represents the state of the art in ceiling speaker design and is designed for reliable and trouble-free performance.

PACKAGE CONTENTS

- Insignia speakers (2)
- Paint plugs (2)
- Grills (2)
- Template (1)
- *Quick Setup Guide*

Tools you will need:

- Pencil
- Keyhole or drywall saw
- Phillips screwdriver
- Sturdy wire or coat hanger
- Wire strippers
- Gloves
- Safety goggles
- Drill
- ¼- to ½-inch drill bit (for drilling test hole)

Before using your new product, please read these instructions to prevent any damage.

MOUNTING SPEAKERS IN THE CEILING

For stereo sound

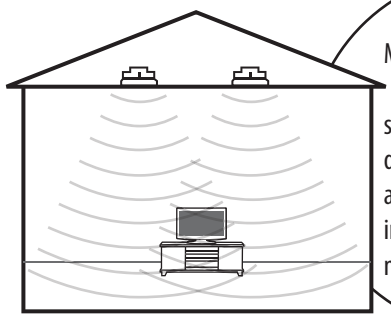

Mount the speakers 6-10 feet apart. Each speaker should be the same distance from the listening area. For detailed mounting instructions, see "Ceiling mount instructions."

For home theater surround sound

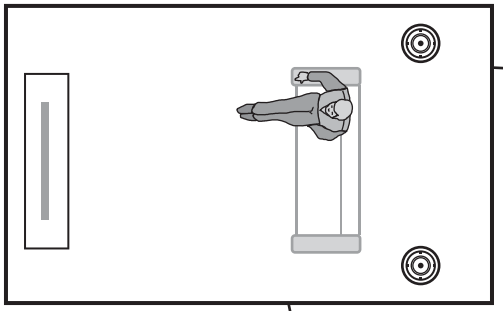

Mount the speakers 6-10 feet apart and 3-6 feet behind the listening area. For detailed mounting instructions, see "Ceiling mount instructions."

CEILING MOUNT INSTRUCTIONS

1 Determine where you want to mount the speakers. The speakers must be mounted in areas where there are no obstructions like studs (joists). Tap the ceiling to find a "hollow" space, or use a stud finder to locate the studs.

Note: Make sure that your speaker wires are long enough to run from the speakers to your audio equipment. If you plan to run the speaker wires through the walls or ceiling, the wires must be UL or CL rated to ensure your safety and to meet building code compliance.

2 Position the cardboard mounting template on the ceiling where you want to mount a speaker, then trace around the template.

3 Drill a small hole in the center of the template outline you drew on the ceiling.

4 Bend a piece of coat hanger wire, then insert the wire into the hole. Slowly rotate the wire to check for any obstructions. If you find an obstruction, patch the hole and find a new location for the speaker.

5 Using a keyhole or drywall saw, carefully cut the ceiling section you outlined, then remove the section.

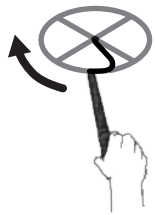

6 Run the wires from the speaker outputs on your audio equipment to your speakers. Allow a few extra feet of wire so you will have enough wire to easily connect the speaker before mounting it to the ceiling.

Note: Use high-quality wire such as 16 gauge speaker wire.

7 (Optional) To improve speaker performance, insert unbacked fiberglass insulation behind and around the speaker.

Warning: To avoid personal injury, wear gloves when inserting the insulation.

8 Pull the wires through the hole in the ceiling. Using wire strippers, strip off the end of the outer wire jacket, then strip about ½ inch of the insulation from the ends of the wires.

9 Connect the positive wire on your audio equipment to the red terminal on the speaker, then connect the negative wire on your audio equipment to the black terminal on the speaker.

Warning: Make sure that your audio equipment is turned off before you connect the speaker wires.

10 Remove the speaker grill by pushing one of the mounting clip screws towards the front of the speaker, then insert the speaker into the hole in the ceiling.

11 Tighten the screws evenly until the speaker is flat against the ceiling.

Caution: If you use a drill to tighten the screws, make sure that you set the drill to its lowest torque speed. Do not overtighten screws.

12 Reinstall the speaker grill.

PAINTING THE SPEAKERS AND GRILLS

The speakers have a weather resistant, ABS finish that you can paint.

To paint the speakers and grills:

1. Remove the grills from the speakers.
2. Make sure that the interior of the speaker is covered so no paint will get inside.
3. Insert one of the supplied paint plugs into the speaker to protect the speaker.
4. Carefully paint the exposed part of the speaker. Remove the plug when you have finished painting.
5. Spray the grill with thin paint (5 parts thinning agent to 1 part paint). Make sure that you do not plug the holes on the grill with paint. Too much paint may adversely affect the speaker sound.

SPECIFICATIONS

- **Woofer** 6 ½" aluminum cone
- **Tweeter** ¾" pivoting aluminum dome
- **Frequency response** 50 Hz to 20 kHz
- **Efficiency** 87 dB 1W 1m 1 kHz
- **Power** 5 watts minimum to 100 watts maximum
- **Impedance** 8 ohms nominal
- **Overall dimensions** 8.9" diameter × 3.9" depth / 227 mm diameter × 99.5 mm depth
- **Cutout dimension** 7.6" (193 mm)
- **Weight** 6.9 lbs (5.5 kg) per pair

ONE-YEAR LIMITED WARRANTY

For complete warranty, visit www.insigniaproducts.com.

CONTACT INSIGNIA:

For customer service, call 1-877-467-4289 (U.S. and Canada)
or 01-800-926-3000 (Mexico)
www.insigniaproducts.com

INSIGNIA is a trademark of Best Buy and its affiliated companies.
Registered in some countries.
Distributed by Best Buy Purchasing, LLC
7601 Penn Ave South, Richfield, MN 55423 U.S.A.
©2014 Best Buy. All rights reserved.
Made in China