Basic User's Guide

MFC-J6930DW

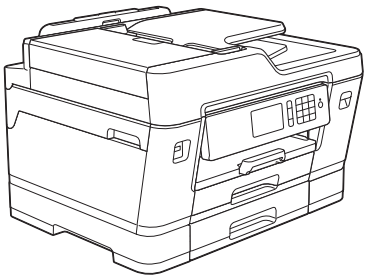

Brother recommends keeping this guide next to your Brother machine for quick reference.

Online User's Guide

This *Basic User's Guide* contains basic instructions and information for your Brother machine.
For more advanced instructions and information, see the *Online User's Guide* at solutions.brother.com/manuals

If you need to call Customer Service

Please complete this information for future reference:

Model Number: **MFC-J6930DW**

Serial Number: [1] _____

Date of Purchase: _____

Place of Purchase: _____

[1] The serial number is on the back of the machine. Retain this User's Guide with your sales receipt as a permanent record of your purchase, in the event of theft, fire or warranty service.

Register your product online at

www.brother.com/registration

By registering your product with Brother, you will be recorded as the original owner of the product. Your registration with Brother:

- may serve as confirmation of the purchase date of your product if you lose your receipt;
- may support an insurance claim by you in the event of product loss covered by insurance; and,
- will help us notify you of enhancements to your product and special offers.

Complete and fax the Brother Warranty Registration and Test Sheet, or register online at www.brother.com/registration.

© 2016 Brother Industries, Ltd. All rights reserved.

Brother Numbers

IMPORTANT

For technical help, you must call the country where you bought the machine. Calls must be made **from within** that country.

FAQs (Frequently Asked Questions)

The Brother Solutions Center is our one-stop resource for all your Fax Machine/Multi-Function Center needs. Download the latest software and utilities and read FAQs and troubleshooting tips to learn how to get the most from your Brother product.

support.brother.com

- Check here for Brother driver updates.
- To keep your machine's performance up-to-date, check here for the latest firmware upgrade.

For Customer Service

In USA:

www.brother-usa.com/support (Self-Service/Email/Chat)

1-877-BROTHER (1-877-276-8437)

1-901-379-1215 (assistance via fax)

1-877-268-9575 (test your fax sending and fax receiving operations)

In Canada:

www.brother.ca/support (Self-Service Videos, Email, Chat, Facebook and Twitter Help)

Service Center Locator (USA only)

For the location of a Brother authorized service center, call 1-877-BROTHER (1-877-276-8437) or visit www.brother-usa.com/service.

Service Center Locations (Canada only)

For the location of a Brother authorized service center, visit www.brother.ca/support.

Ordering Accessories and Supplies

For best quality results use only genuine Brother supplies, which are available at most Brother retailers. If you cannot find the supplies you need and have a Visa, MasterCard, Discover, American Express credit card, or PayPal account, you can order directly from Brother. Visit us online for a complete selection of the Brother accessories and supplies that are available for purchase.

NOTE

In Canada, only Visa and MasterCard are accepted.

In USA:

1-877-552-MALL (1-877-552-6255)

1-800-947-1445 (assistance via fax)

www.brothermall.com

In Canada:

www.brother.ca

Order Information

Description	Item
Ink Cartridge Super High Yield <black / yellow / cyan (blue) / magenta (red) >	LC3019BK / LC3019Y / LC3019C / LC3019M (Prints approx. 3000 pages / black) [1] (Prints approx. 1500 pages / yellow / cyan (blue) / magenta (red)) [1]
Ink Cartridge High Yield <black / yellow / cyan (blue) / magenta (red) >	LC3017BK / LC3017Y / LC3017C / LC3017M (Prints approx. 550 pages) [1]
Premium Plus Glossy Photo Paper (Ledger size / 20 sheets) (Letter size / 20 sheets) (4" x 6" size / 20 sheets)	 BP71GLGR BP71GLTR BP71GP20
Multipurpose Paper - Plain Paper (Letter size / 500 sheets)	 BP60MPLTR (USA only)
Plain Inkjet Paper (Ledger size / 100 sheets)	 BP60PLGR (USA only)

[1] For more information about the replacement supplies, visit www.brother.com/pageyield.

Notice - Disclaimer of Warranties (USA and Canada)

BROTHER'S LICENSOR(S), AND THEIR DIRECTORS, OFFICERS, EMPLOYEES OR AGENTS (COLLECTIVELY BROTHER'S LICENSOR) MAKE NO WARRANTIES, EXPRESS OR IMPLIED, INCLUDING WITHOUT LIMITATION THE IMPLIED WARRANTIES OF MERCHANTABILITY AND FITNESS FOR A PARTICULAR PURPOSE, REGARDING THE SOFTWARE. BROTHER'S LICENSOR(S) DOES NOT WARRANT, GUARANTEE OR MAKE ANY REPRESENTATIONS REGARDING THE USE OR THE RESULTS OF THE USE OF THE SOFTWARE IN TERMS OF ITS CORRECTNESS, ACCURACY, RELIABILITY, CURRENTNESS OR OTHERWISE. THE ENTIRE RISK AS TO THE RESULTS AND PERFORMANCE OF THE SOFTWARE IS ASSUMED BY YOU. THE EXCLUSION OF IMPLIED WARRANTIES IS NOT PERMITTED BY SOME STATES IN THE USA AND SOME PROVINCES IN CANADA. THE ABOVE EXCLUSION MAY NOT APPLY TO YOU.

IN NO EVENT WILL BROTHER'S LICENSOR(S) BE LIABLE TO YOU FOR ANY CONSEQUENTIAL, INCIDENTAL OR INDIRECT DAMAGES (INCLUDING DAMAGES FOR LOSS OF BUSINESS PROFITS, BUSINESS INTERRUPTION, LOSS OF BUSINESS INFORMATION, AND THE LIKE) ARISING OUT OF THE USE OR INABILITY TO USE THE SOFTWARE EVEN IF BROTHER'S LICENSOR HAS BEEN ADVISED OF THE POSSIBILITY OF SUCH DAMAGES. BECAUSE SOME STATES IN THE USA AND SOME PROVINCES IN CANADA DO NOT ALLOW THE EXCLUSION OR LIMITATION OF LIABILITY FOR CONSEQUENTIAL OR INCIDENTAL DAMAGES, THE ABOVE LIMITATIONS MAY NOT APPLY TO YOU. IN ANY EVENT BROTHER'S LICENSOR'S LIABILITY TO YOU FOR ACTUAL DAMAGES FROM ANY CAUSE WHATSOEVER, AND REGARDLESS OF THE FORM OF THE ACTION (WHETHER IN CONTRACT, TORT (INCLUDING NEGLIGENCE), PRODUCT LIABILITY OR OTHERWISE), WILL BE LIMITED TO $50.

You Can Use the Following Features

High Speed Copy & Scan

When you place a document, **long edge first** in the ADF or in the left side of the scanner glass, you can copy and scan with High Speed.

Make sure your document size is Letter or A4.

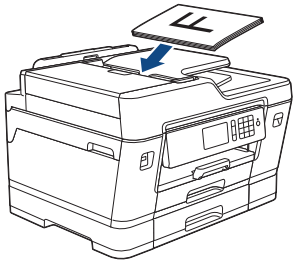

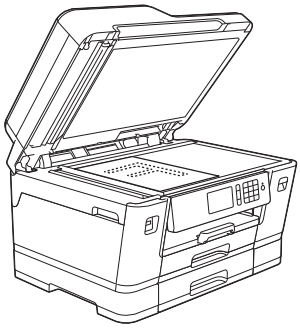

Easy-to-use Multi-Purpose Tray

The Multi-Purpose Tray (MP Tray) allows printing on a wide variety of paper with quick exchange.

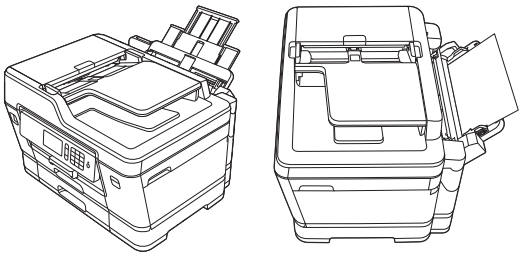

Mobile Connect

Use Brother iPrint&Scan to check the machine status and access various functions from mobile devices.

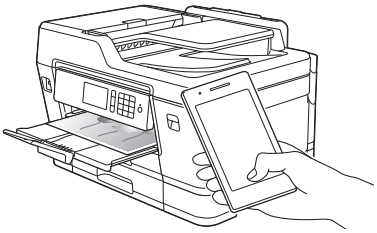

If your Android™ device supports Near Field Communication (NFC), you can print and scan just by touching your device to the NFC symbol on the control panel.

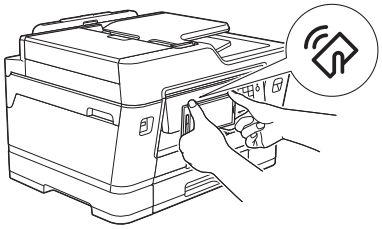

For more information, see the *Mobile Print/Scan Guide for Brother iPrint&Scan*:

solutions.brother.com/manuals

You can download many useful apps to use with this machine at www.brother.com/apps

User's Guides and Where to Find Them

Which Guide?	What's in It?	Where Is It?
Product Safety Guide	Read this Guide first. Please read the Safety Instructions before you set up your machine. See this Guide for trademarks and legal limitations.	Printed / In the box
Quick Setup Guide	Follow the instructions for setting up your machine, and installing the drivers and software for the operating system and connection type you are using.	Printed / In the box
Basic User's Guide	Learn the basic PC-Print, Direct Print, Scan, Copy and Fax operations and basic machine maintenance. See troubleshooting tips.	Printed / In the box
Online User's Guide	This guide includes the additional contents of the *Basic User's Guide*. In addition to information about the PC-Print, Direct Print, Scan, Copy, Fax, Internet services, Mobile Functions and Brother ControlCenter operations, useful information is included about using the machine on a network.	Brother Solutions Center [1]
Mobile Print/Scan Guide for Brother iPrint&Scan	This Guide provides useful information about printing from your mobile device, and scanning from your Brother machine to your mobile device when connected to a Wi-Fi® network.	

1 Visit solutions.brother.com/manuals.

Basic Operations and Where to Find Instructions

The contents of the *Basic User's Guide* are also included in the *Online User's Guide* with more details.

Features	Contents	Guide
Setup	Load paper	Basic User's Guide
	Connect the machine to your computer	Quick Setup Guide
	Connect the machine to your mobile device	Quick Setup Guide
Copy	Copy a document	Basic User's Guide
	Various types of copies (2-sided copies, and so on)	Online User's Guide
Print	Print from your computer (Windows®/ Macintosh)	Basic User's Guide
	Print photos from a USB flash drive	Basic User's Guide
	Print from your mobile device (Brother iPrint&Scan)	Mobile Print/Scan Guide
	Print using mobile functions	Online User's Guide
	Print data downloaded from a cloud service	Online User's Guide
Fax	Send and receive a fax	Basic User's Guide
	Transfer a fax to your computer	Online User's Guide
	Send and receive a fax using your computer	Basic User's Guide
	Send and view a fax using your mobile device (Brother iPrint&Scan)	Mobile Print/Scan Guide
Scan	Scan from the machine	Basic User's Guide
	Scan from your computer	Basic User's Guide
	Scan from your mobile device (Brother iPrint&Scan)	Mobile Print/Scan Guide
	Save scanned data to a cloud service	Online User's Guide
Additional information	Error messages	Basic User's Guide
	Troubleshooting	Basic User's Guide
	Specifications	Online User's Guide

The Online User's Guide Helps You Get the Most Out of Your Machine

We hope that you find this guide helpful. To learn more about your machine's features, please take a look at our *Online User's Guide*. It offers:

Quicker Navigation!

- ✓ Search box
- ✓ Navigation index in a separate panel

Comprehensive Format!

- ✓ Every topic in one guide

Simplified Layout!

- ✓ Step-by-step instructions
- ✓ Feature summary at the top of the page

1. Search Box
2. Navigation
3. Summary
4. Step-by-Step Instructions

To View Online User's Guides

To view the *Online User's Guide* and other available guides, visit solutions.brother.com/manuals.

(Windows®)

You can also access your machine's guides using Brother Utilities. The Brother Utilities tool is included in the standard installation and, when installed, you can find it either as a shortcut on your desktop, or from the Windows® **Start** menu.

Questions or Problems? Take a Look at our FAQs, Solutions, and Videos Online.

Go to your model's FAQs & Troubleshooting page on the Brother Solutions Center at support.brother.com

- **Provides several ways to search**
- **Displays related questions for more information**
- **Receives regular updates based on customer feedback**

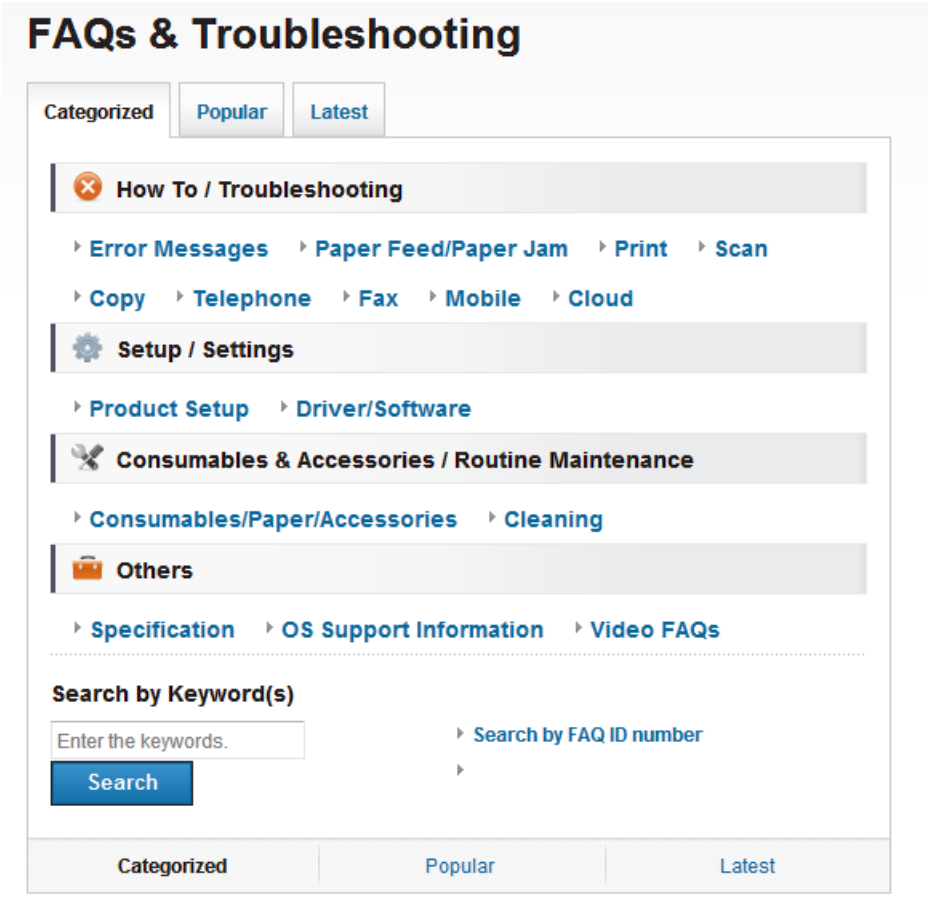

Since the Brother Solutions Center is updated regularly, this screen is subject to change without notice.

Definitions of Notes

We use the following symbols and conventions throughout this User's Guide:

WARNING	WARNING indicates a potentially hazardous situation which, if not avoided, could result in death or serious injuries.
CAUTION	CAUTION indicates a potentially hazardous situation which, if not avoided, may result in minor or moderate injuries.
IMPORTANT	IMPORTANT indicates a potentially hazardous situation which, if not avoided, may result in damage to property or loss of product functionality.
NOTE	NOTE specifies the operating environment, conditions for installation, or special conditions of use.
	Tips icons indicate helpful hints and supplementary information.
	Electrical Hazard icons alert you to possible electrical shock.
Bold	Bold style identifies buttons on the machine's control panel or computer screen.
Italics	Italicized style emphasizes an important point or refers you to a related topic.
`Courier New`	Courier New font identifies messages shown on the machine's LCD.

- The screens in this User's Guide are for illustration purposes only and may differ from the actual screens.

For the Latest Driver Updates

Go to your model's **Downloads** page on the Brother Solutions Center at support.brother.com to download drivers. To keep your machine’s performance up-to-date, check there for the latest firmware upgrades.

Compilation and Publication Notice

Under the supervision of Brother Industries, Ltd., this manual has been compiled and published, covering the latest product's descriptions and specifications.

The contents of this manual and the specifications of this product are subject to change without notice.

Brother reserves the right to make changes without notice in the specifications and materials contained herein and shall not be responsible for any damages (including consequential) caused by reliance on the materials presented, including but not limited to typographical and other errors relating to the publication.

Table of Contents

1 General Information 1

Control Panel Overview 1

Touchscreen LCD Overview 3
New Information from Brother 6

Access Brother Utilities (Windows®) 6
Uninstall the Brother Software and Drivers (Windows®) 7

2 Paper Handling 8

Load Paper 8
Loading Paper Overview 8
Load Letter or A4 Size Paper in Paper Tray #1 / Paper Tray #2 10
Load Ledger, Legal, or A3 Size Paper in Paper Tray #1 / Paper Tray #2 12
Load Paper in the Multi-purpose Tray (MP Tray) 15

Change the Paper Size and Paper Type 18

Change the Check Paper Size Setting 18

Recommended Print Media 19

Handle and Use Print Media 19

Load Documents 19
Load Documents in the Automatic Document Feeder (ADF) 19
Load Documents on the Scanner Glass 20

3 Print 22

Print from Your Computer 22
Print a Document (Windows®) 22
Print a Document (Macintosh) 22
Various Printing 22

Print Photos Directly from a USB Flash Drive 23
Preview and Print Photos from a USB Flash Drive 23
Print Settings Overview 23

4 Copy 24

Copy a Document 24

Other Copy Options 24

5 Scan 25

Before Scanning 25

Scan from Your Computer (Windows®) 25
Scan Using ControlCenter4 Advanced Mode (Windows®) 25

Scan Using the Scan Button on Your Brother Machine 26

Scan Using the Scan Button on the Machine 26

6 **Fax** **27**

Before Faxing 27
Set Your Station ID 27
Telephone Line Interference/VoIP.....27
Receive Modes Overview 28
Choose the Correct Receive Mode.....29
Set the F/T Ring Time (Pseudo/Double-ring).....30
Set the Number of Rings Before the Machine Answers (Ring Delay) 30

Store Numbers 31
Store Address Book Numbers 31
Change or Delete Address Book Names or Numbers 31

Telephone Services and External Devices 32
Voice Mail 32
Caller ID.....32
Distinctive Ring 32
Voice Over Internet Protocol (VoIP).....32
Connection of an External Telephone Answering Device (TAD).....32
External and Extension Telephones 32

Fax Using Your Machine 33
Send a Fax 33

Fax Using Your Computer (PC-FAX).....34
Send Faxes from Your Computer 34
Receive Faxes on Your Computer (Windows® only) 35

A **Routine Maintenance** **36**

Clean the Scanner.....36

Check the Print Quality.....36

Check the Print Alignment from Your Brother Machine 38

B **Troubleshooting** **39**

Identify the Problem.....39

Error and Maintenance Messages.....40
Transfer Your Faxes or Fax Journal Report.....45

Troubleshooting for Wireless LAN setup 47
Wireless LAN Report Error Codes.....47

Print or Scan Problems.....48
Troubleshooting for Other Print Problems 50

Fax and Telephone Problems.....52
Troubleshooting for Other Fax Problems.....53

Document and Paper Jams 55
Document Jams.....55
Printer Jam or Paper Jam.....56

C Appendix 65

Enter Text on Your Brother Machine 65

Check the Machine Information 65

Reset Your Brother Machine 66

Reset Functions Overview 66

Supply Specifications 67

D Index 68

1 General Information

Control Panel Overview

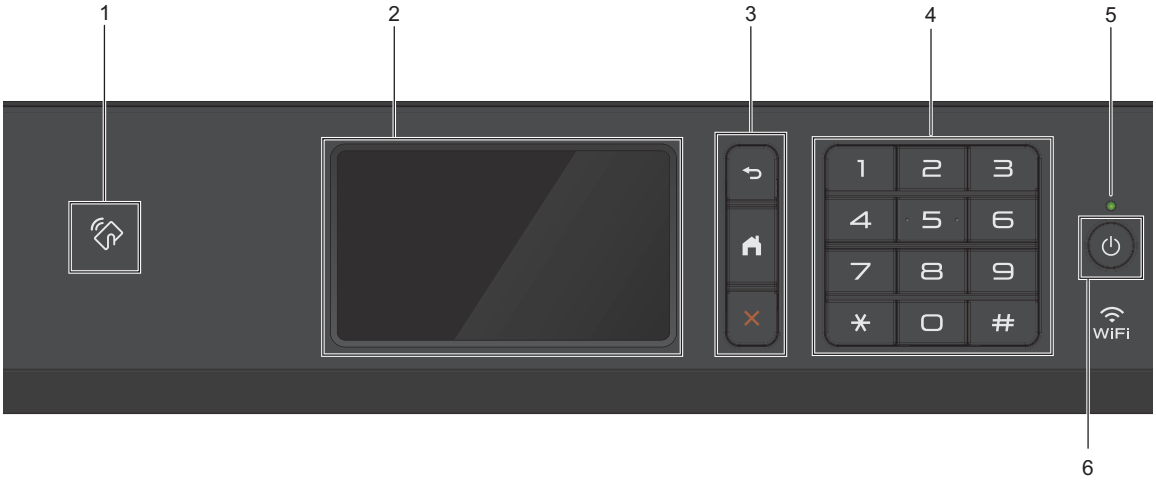

1. **NFC (Near Field Communication) symbol**

   You can use card authentication by touching the IC card to the NFC symbol on the control panel.

   If your Android™ device supports the NFC feature, you can print from your device or scan documents to your device in the same way.

2. **Touchscreen Liquid Crystal Display (LCD)**

   Access menus and options by pressing them on the Touchscreen.

   Adjust the angle of the control panel by lifting it.

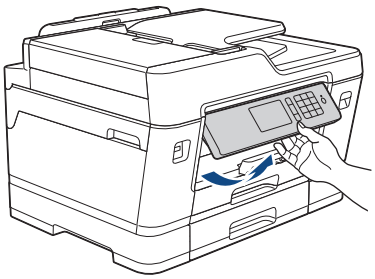

3. **Menu buttons**

   (Back)

   Press to go back to the previous menu.

   (Home)

   Press to return to the Home screen.

   (Cancel)

   Press to cancel an operation.

4. **Dial Pad**

   Press the numbers to dial telephone or fax numbers and to enter the number of copies.

5. **LED Power Indicator**

   The LED lights up depending on the machine's power status.

   When the machine is in Sleep Mode, the LED blinks.

6. **Power On/Off**

   Press to turn on the machine.

   Press and hold down to turn off the machine. The Touchscreen will display `[Shutting Down]` and will stay on for a few seconds before turning itself off. If you have connected an external telephone or TAD, it is always available.

   If you turn off the machine using , it will still clean the print head periodically to maintain print quality. To prolong print head life, provide better ink efficiency, and maintain print quality, keep your machine connected to a power source at all times.

Touchscreen LCD Overview

There are three Home screens that you can access by swiping left or right or pressing ◀ or ▶.

From the Home screens, you can access Shortcuts, Wi-Fi setup, Settings and Ink levels screens.

Home Screen 1

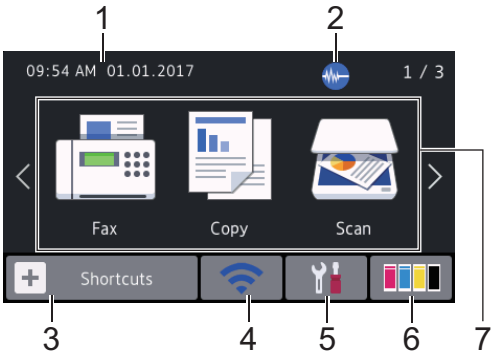

This screen shows the machine's status when the machine is idle. This Home screen is also called the Ready Mode screen. When displayed, it indicates that your machine is ready for the next command.

> You can change the Ready Mode screen.
>
> For more information, see the *Online User's Guide*: *Set the Ready Screen*.

Home Screen 1 provides access to `[Fax]`, `[Copy]` and `[Scan]` operations.

Home Screen 2

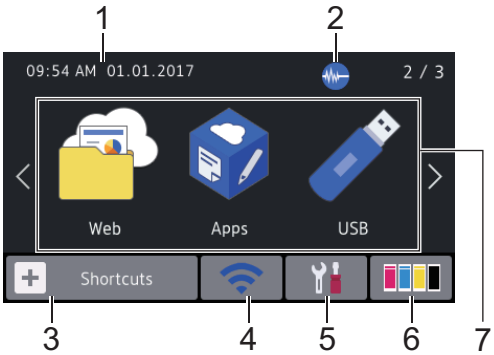

Home Screen 2 provides access to additional features, such as `[Web]`, `[Apps]` and `[USB]` operations.

Home Screen 3

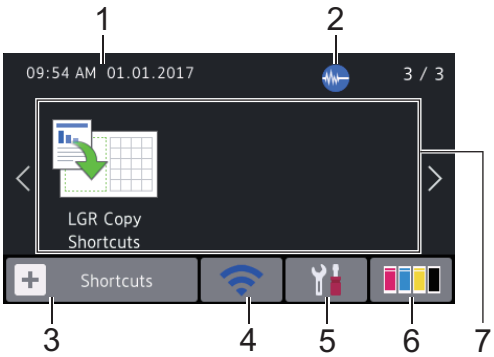

Home Screen 3 provides access to `[LGR Copy Shortcuts]`.

1. **Date & Time**

   Displays the date and time set on the machine.

2. **Quiet Mode**

   This icon appears when the `[Quiet Mode]` setting is set to `[On]`.

   The Quiet Mode setting can reduce printing noise. When Quiet Mode is turned on, the print speed becomes slower.

3. **`[Shortcuts]`**

   Create Shortcuts for frequently-used operations, such as sending a fax, copying, scanning, Web Connect and Apps services.

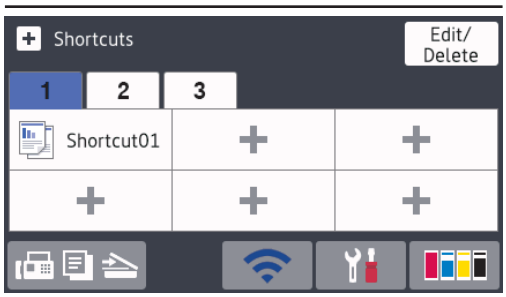

- Three Shortcuts tabs are available with six Shortcuts on each tab.
- Press , displayed at the bottom of the screen to access the Home Screens.

4. **Wireless Status**

Each icon in the following table shows the wireless network status:

WiFi	Your machine is not connected to the wireless access point. Press this button to configure wireless settings. For more information, see the *Quick Setup Guide*.
	Wireless network is connected. A three-level indicator in each of the Home screens displays the current wireless signal strength.
	The wireless access point cannot be detected.
	The wireless setting is disabled.

You can configure wireless settings by pressing the Wireless Status button.

5. **[Settings]**

Press to access the [Settings] menu.

6. **[Ink]**

Displays the available ink volume. Press to access the [Ink] menu.

When an ink cartridge is near the end of its life or having a problem, an error icon is displayed on the ink color.

7. **Modes:**

- **[Fax]**

  Press to access Fax mode.

- **[Copy]**

  Press to access Copy mode.

- **[Scan]**

  Press to access Scan mode.

- **[Web]**

  Press to connect the Brother machine to an Internet service.

  For more information, see the *Online User's Guide*.

- **[Apps]**

  Press to connect the Brother machine to the Brother Apps service.

  For more information, see the *Online User's Guide*.

- **[USB]**

  Press to access the [USB] menu.

- **[LGR Copy Shortcuts]**

  Press to copy to Ledger or A3 size paper using this preset menu.

8. **[Stored Faxes:]**

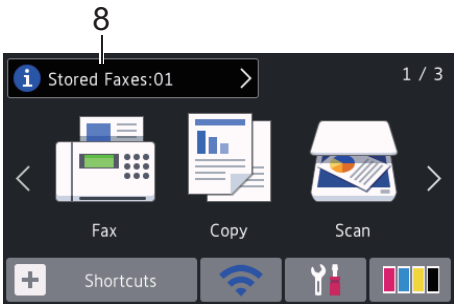

[Stored Faxes] displays how many received faxes are in the machine's memory.

Press to print the faxes.

9. **[New Faxes:]**

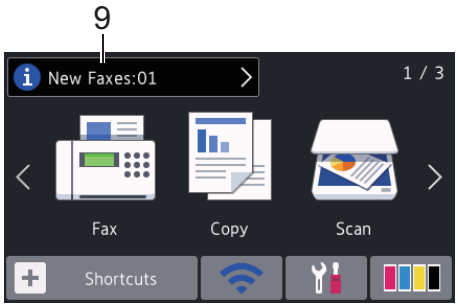

When [Fax Preview] is set to [On], [New Faxes] displays how many new faxes you have received and stored in the memory.

Press to view the faxes on the Touchscreen.

If you receive a fax containing multiple paper sizes (for example, a Letter size page and a Ledger size page), the machine may create and store a file for each paper size, so the Touchscreen may show that more than one fax job has been received.

10. **Warning icon**

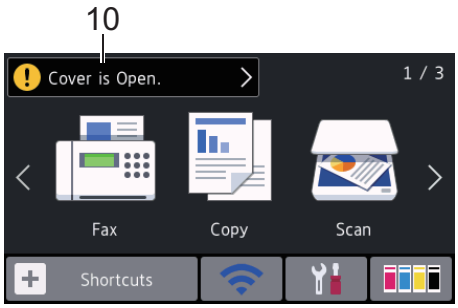

The warning icon appears when there is an error or maintenance message; press to view the details, and then press to return to Ready mode.

IMPORTANT

DO NOT press the LCD with a sharp object such as a pen or stylus. It may damage the machine.

- This product adopts the font of ARPHIC TECHNOLOGY CO.,LTD.
- DO NOT touch the LCD immediately after plugging in the power cord or turning on the machine. Doing this may cause an error.

New Information from Brother

New information from Brother appears in the information bar when the notification settings such as [Message from Brother] and [Firmware Auto Check] are set to [On].

Press to view the details.

Internet connection is needed, and data rates may apply.

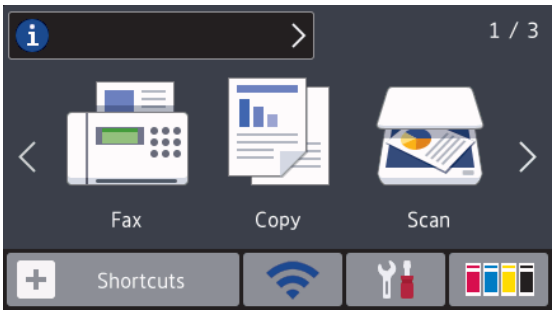

Access Brother Utilities (Windows®)

Brother Utilities is an application launcher that offers convenient access to all Brother applications installed on your computer.

1 Do one of the following:

- Windows Vista® and Windows® 7

  Click **(Start)** > **All Programs** > **Brother** > **Brother Utilities**.

- Windows® 8

  Tap or click (**Brother Utilities**) either on the **Start** screen or the desktop.

- Windows® 8.1

  Move your mouse to the lower left corner of the **Start** screen and click (if using a touch-based device, swipe up from the bottom of the **Start** screen to bring up the **Apps** screen).

  When the **Apps** screen appears, tap or click (**Brother Utilities**).

- Windows® 10

  Click > **All apps** > **Brother** > **Brother Utilities**.

2 Select your machine.

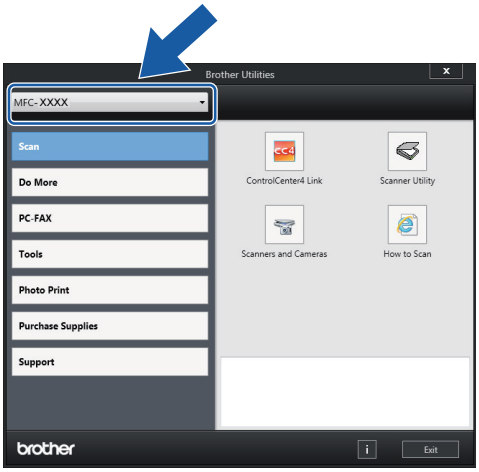

3 Select the operation you want to use.

Uninstall the Brother Software and Drivers (Windows®)

1 Launch (**Brother Utilities**).

2 Click the drop-down list, and then select your model name (if not already selected). Click **Tools** in the left navigation bar, and then click **Uninstall**.

Follow the instructions in the dialog box to uninstall the software and drivers.

2 Paper Handling

Load Paper

Loading Paper Overview

1 Load the paper in the paper tray as follows.

Fan the stack of paper well.

The paper size determines the orientation when loading paper.

Tray #1	Tray #2	How to Load Paper
Letter ♦ A4 ♦ Executive	Letter ♦ A4 ♦ (Plain paper and Recycled paper only)	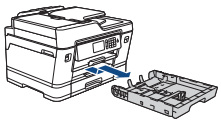 Adjust the paper guides. Landscape orientation 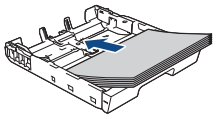
A5 A6 Photo Photo L Photo 2L Index card Envelopes	-	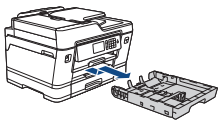 Adjust the paper guides. Portrait orientation 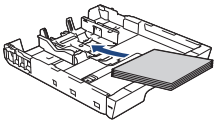
Ledger ♦ A3 ♦ Legal ♦ Folio Mexico Legal India Legal	Ledger ♦ A3 ♦ Legal ♦ Folio Mexico Legal India Legal (Plain paper and Recycled paper only)	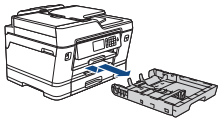 Extend the tray using the green slider, then adjust the paper guides. 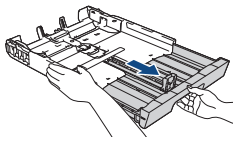 Portrait orientation 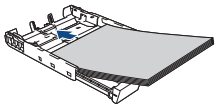

MP Tray	How to Load Paper
Letter ♦ A4 ♦ Executive	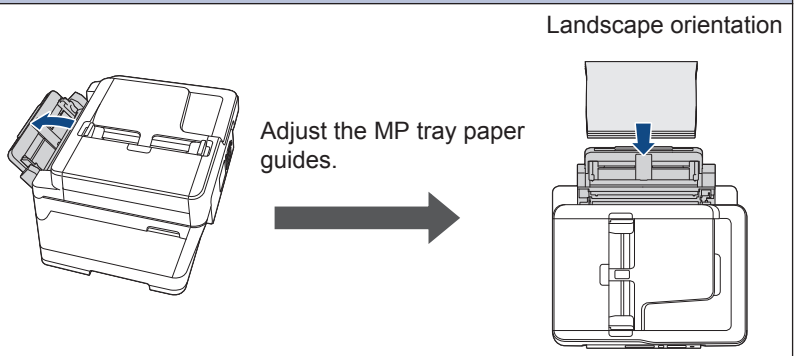
Ledger A3 Legal Folio Mexico Legal India Legal A5 A6 Photo Photo L Photo 2L Index card Envelopes	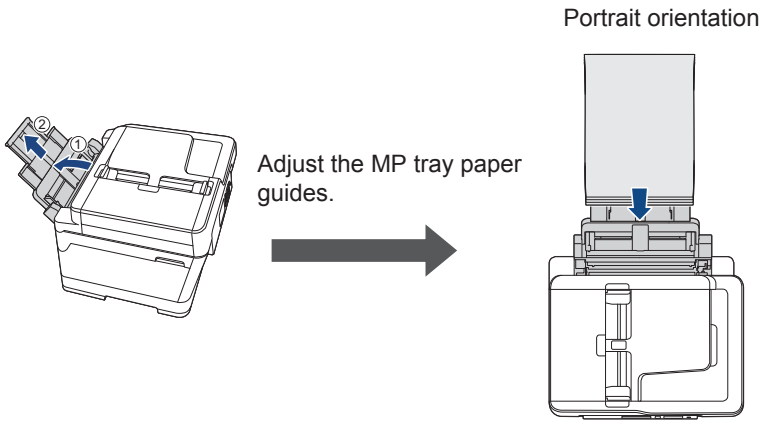

♦ See the details in this chapter.

For more information about other paper sizes, see the *Online User's Guide*: *Load Paper*.

2 Unfold the paper support flap.

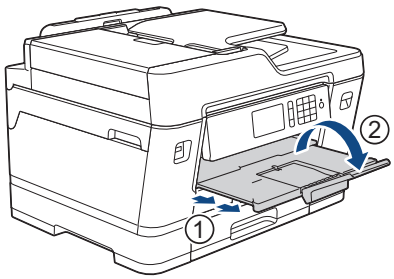

3 Change the paper size setting in the machine's menu, if needed.

Load Letter or A4 Size Paper in Paper Tray #1 / Paper Tray #2

- If the [Check Paper] setting is set to [On] and you pull the paper tray out of the machine, a message appears on the LCD asking if you want to change the paper type and paper size. Change the Paper Size and Paper Type settings if needed, following the LCD instructions.
- Load only one size and type of paper in the paper tray at a time.
- When you load a different paper size in the tray, you must change the Paper Size setting in the machine or the paper size setting on your computer.

  Doing this enables the machine to automatically feed paper from the appropriate tray if Auto Tray Select has been set in the machine or printer driver.

These instructions describe how to load paper in Tray #1. The steps for Tray #2 are very similar.

1 Pull the paper tray completely out of the machine as shown by the arrow.

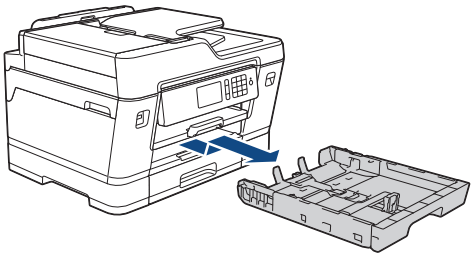

When you load paper in Tray #2, remove the tray top cover (1).

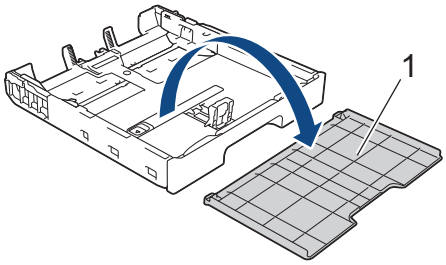

2 Gently press and slide the paper width guides (1) and then the paper length guide (2) to fit the paper size.

Make sure the triangular mark (3) on the paper width guide (1) and paper length guide (2) line up with the marks for the paper you are using.

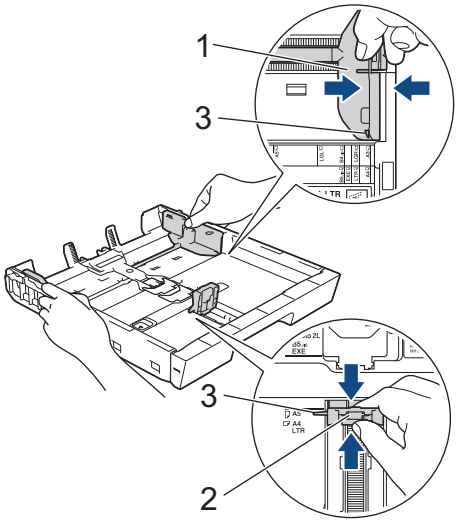

3 Fan the stack of paper well to avoid paper jams and misfeeds.

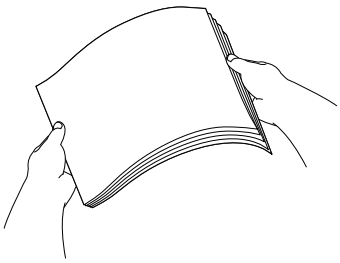

Always make sure the paper is not curled or wrinkled.

4 Gently load paper in the paper tray with the printing surface *face down*.

Landscape orientation

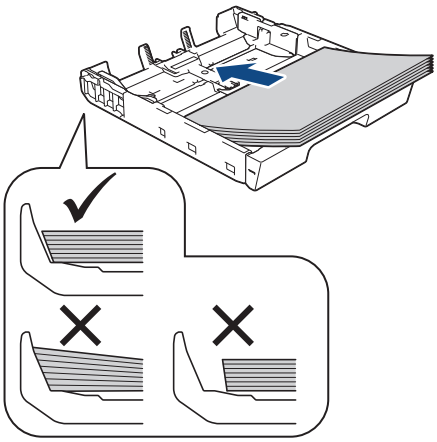

5 Make sure the paper length guide (1) touches the edges of the paper.

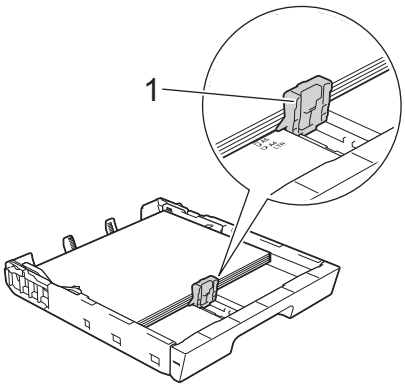

6 Gently adjust the paper width guides (1) to fit the paper.

Make sure the paper guides touch the edges of the paper.

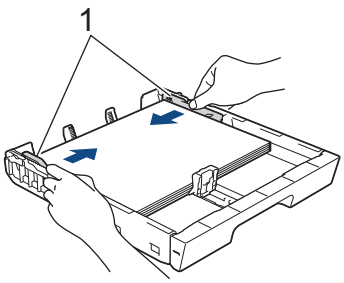

7 Make sure the paper is flat in the tray and below the maximum paper mark (1).

Overfilling the paper tray may cause paper jams.

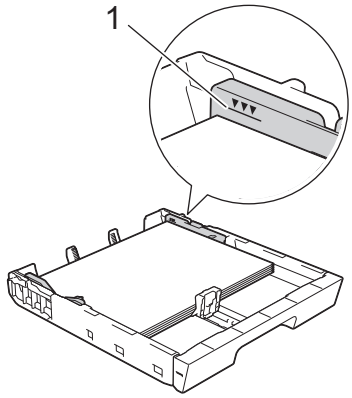

When you load paper in Tray #2, replace the tray top cover.

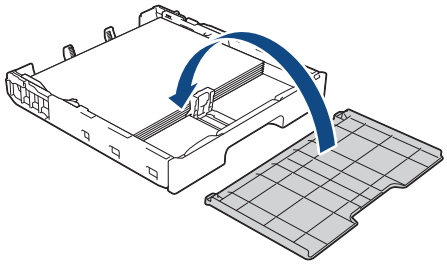

8 Slowly push the paper tray completely into the machine.

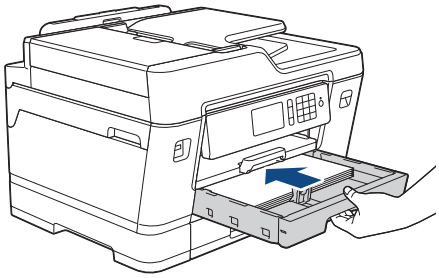

9 Pull out the paper support until it locks into place.

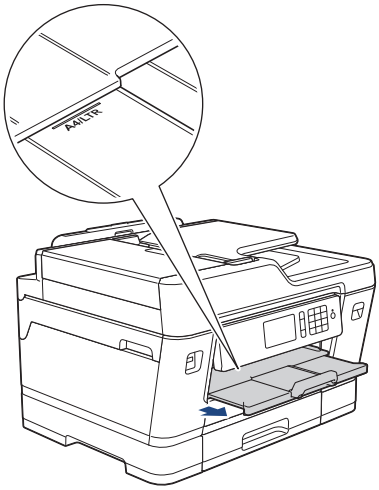

10 Change the paper size setting in the machine's menu, if needed.

Load Ledger, Legal, or A3 Size Paper in Paper Tray #1 / Paper Tray #2

- If the `[Check Paper]` setting is set to `[On]` and you pull the paper tray out of the machine, a message appears on the LCD asking if you want to change the paper type and paper size. Change the Paper Size and Paper Type settings if needed, following the LCD instructions.
- Load only one size and type of paper in the paper tray at a time.
- When you load a different paper size in the tray, you must change the Paper Size setting in the machine or the paper size setting on your computer.

  Doing this enables the machine to automatically feed paper from the appropriate tray if Auto Tray Select has been set in the machine or printer driver.

These instructions describe how to load paper in Tray #1. The steps for Tray #2 are very similar.

1 Pull the paper tray completely out of the machine as shown by the arrow.

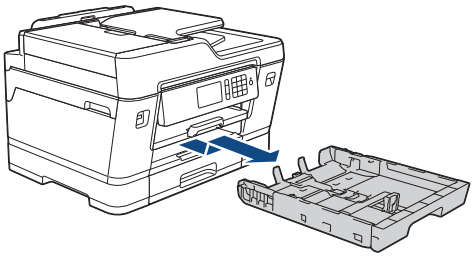

When you load paper in Tray #2, remove the tray top cover (1).

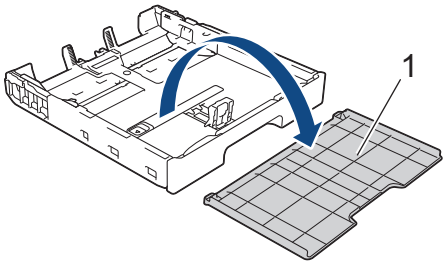

2 Rest the tray on a flat surface.

Push the green slider to the left and then extend the tray until it locks into place.

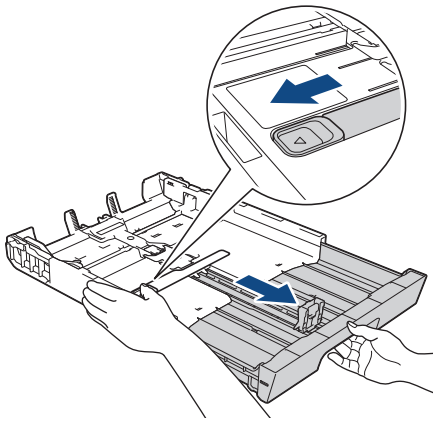

3 Gently press and slide the paper width guides (1) and then the paper length guide (2) to fit the paper size.

Make sure the triangular mark (3) on the paper width guide (1) and paper length guide (2) line up with the marks for the paper you are using.

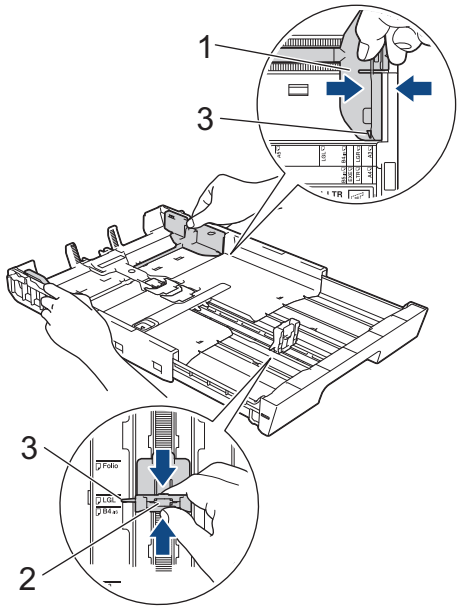

4 Fan the stack of paper well to avoid paper jams and misfeeds.

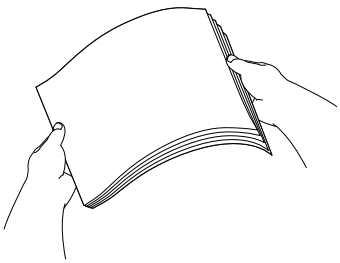

Always make sure the paper is not curled or wrinkled.

5 Gently load paper in the paper tray with the printing surface *face down*.

Portrait orientation

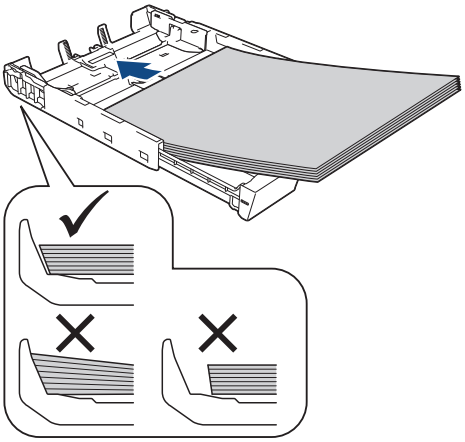

6 Make sure the paper length guide (1) touches the edges of the paper.

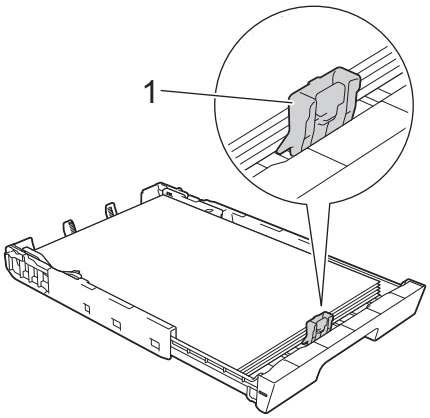

7 Gently adjust the paper width guides (1) to fit the paper.

Make sure the paper guides touch the edges of the paper.

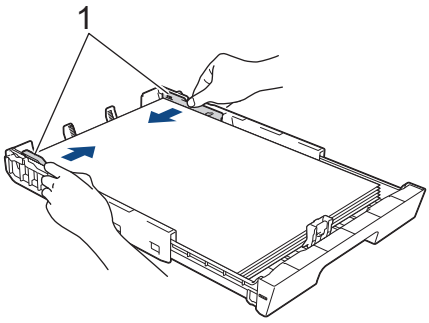

8 Make sure the paper is flat in the tray and below the maximum paper mark (1).

Overfilling the paper tray may cause paper jams.

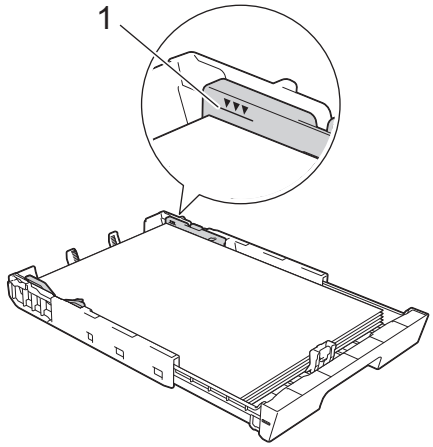

When you load paper in Tray #2, replace the tray top cover.

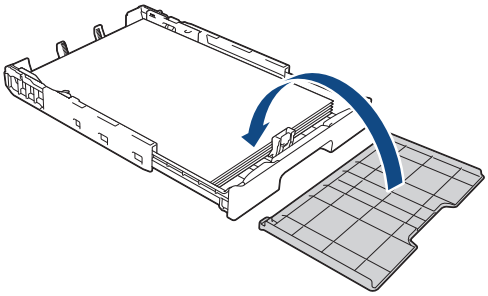

9 Slowly push the paper tray completely into the machine.

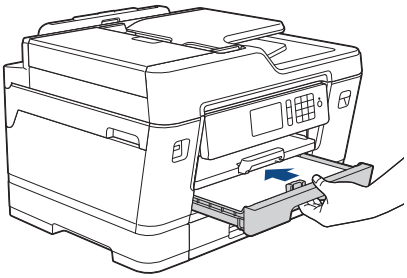

10 Pull out the paper support (1) until it locks into place, and then unfold the paper support flap (2).

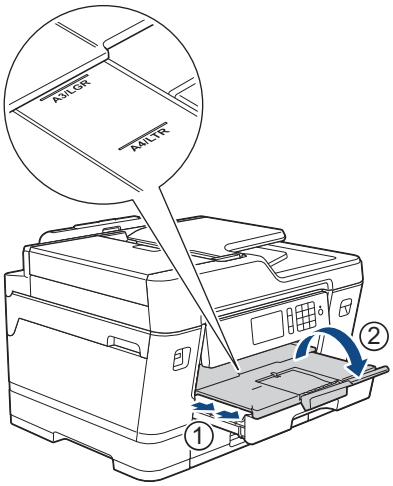

11 Change the paper size setting in the machine's menu, if needed.

Load Paper in the Multi-purpose Tray (MP Tray)

- If the `[Check Paper]` setting is set to `[On]` and you set the paper in the MP tray, a message appears on the LCD asking if you want to change the paper type and paper size. Change the Paper Size and Paper Type settings if needed, following the LCD instructions.
- Load only one size and type of paper in the paper tray at a time.
- When you load a different paper size in the tray, you must change the Paper Size setting in the machine or the paper size setting on your computer.

  Doing this enables the machine to automatically feed paper from the appropriate tray if Auto Tray Select has been set in the machine or printer driver.

When using Letter or A4 size paper:

1 Open the MP tray.

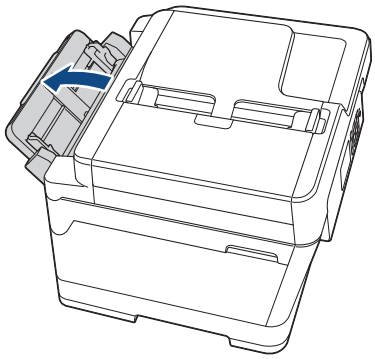

2 Gently press and slide the MP tray paper guides to match the width of the paper you are using.

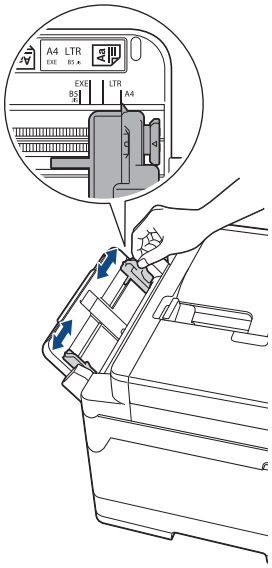

3 Fan the stack of paper well to avoid paper jams and misfeeds.

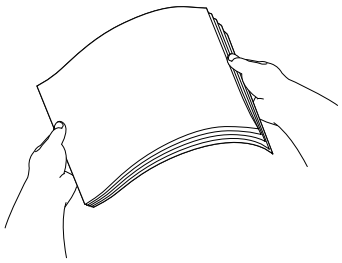

- Always make sure the paper is not curled or wrinkled.
- You can load up to 100 sheets of plain paper.

4 Gently load the paper in the MP tray with the printing surface *face up*.

Landscape orientation

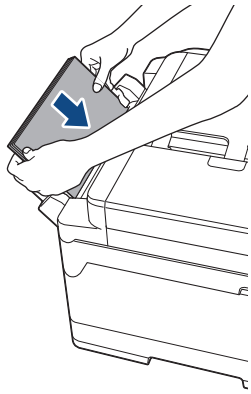

If you are having difficulty loading paper in the MP tray, push the release lever (1) toward the back of the machine, and then load the paper.

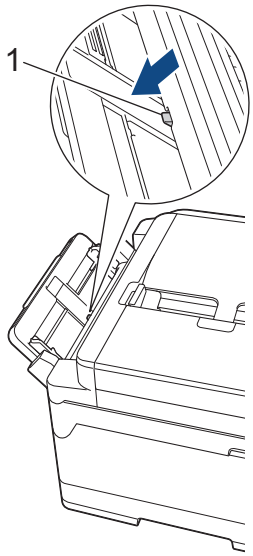

5 Using both hands, gently adjust the MP tray paper guides to fit the paper.

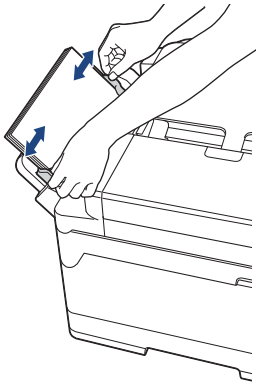

6 Pull out the paper support until it locks into place.

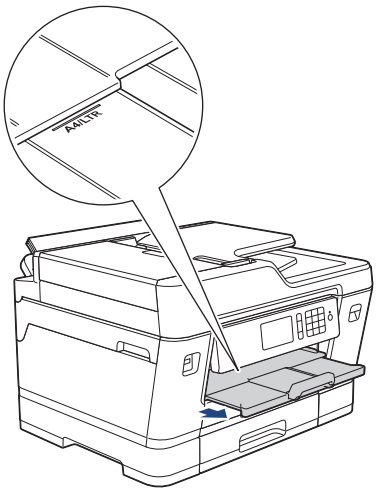

7 Change the paper size setting in the machine's menu, if needed.

Related Information

- Error and Maintenance Messages on page 40

Change the Paper Size and Paper Type

Set the Paper Size and Paper Type settings for the paper tray.

- To get the best print quality, set the machine for the type of paper you are using.
- When you change the size of the paper you load in the tray, you must change the Paper Size setting on the LCD at the same time.

1. Press [Settings] > [Tray Setting].
2. Press the tray option you want.
3. Press [Paper Type].
4. Press the paper type option you want.

Use plain paper only in Tray #2.

5. Press [Paper Size].
6. Swipe up or down or press ▲ or ▼ to display the paper size options, and then press the option you want.
7. Press .

The machine ejects paper with the printed surface face up onto the paper tray at the front of the machine. When you use glossy paper, remove each sheet at once to prevent smudging or paper jams.

Related Information

- Error and Maintenance Messages on page 40

Change the Check Paper Size Setting

If the Check Paper setting is set to [On] and you pull the paper tray out of the machine or load paper in the MP Tray, the LCD displays a message asking if you want to change the Paper Size and Paper Type settings.

The default setting is [On].

1. Press [Settings] > [All Settings] > [General Setup] > [Tray Setting] > [Check Paper].
2. Press [On] or [Off].
3. Press .

Related Information

- Error and Maintenance Messages on page 40

Recommended Print Media

For the best print quality, we recommend using the Brother paper listed in the table.

Brother paper

Paper Type	Item
Premium Plus Glossy Photo	
Ledger	BP71GLGR
Letter	BP71GLTR
4" x 6"	BP71GP20
Plain Inkjet	
Ledger	BP60PLGR (USA only)

Handle and Use Print Media

- Store paper in its original packaging and keep it sealed. Keep the paper flat and away from moisture, direct sunlight and heat.
- Avoid touching the shiny (coated) side of photo paper.

IMPORTANT

DO NOT use the following kinds of paper:

- Damaged, curled, wrinkled, or irregularly shaped

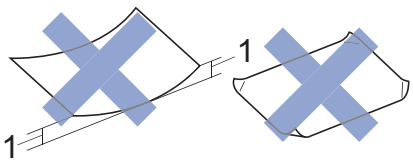

1. **0.08 in. (2 mm) or greater curl may cause jams to occur.**

- Extremely shiny or highly textured
- Paper that cannot be arranged uniformly when stacked
- Paper made with a short grain

Load Documents

Load Documents in the Automatic Document Feeder (ADF)

The ADF can hold multiple pages and feeds each sheet individually.

Use paper that is within the sizes and weights shown in the table. Always fan the pages before placing them in the ADF.

Document Sizes and Weights

Length [1]:	5.8 to 17.0 in. (148 to 431.8 mm)
Width:	4.1 to 11.7 in. (105 to 297 mm)
Paper Weight:	17 to 24 lb (64 to 90 g/m²)

1 Up to 35.4 in. (900 mm) when using the long paper function.

IMPORTANT

- DO NOT pull on the document while it is feeding.
- DO NOT use paper that is curled, wrinkled, folded, ripped, stapled, paper clipped, pasted or taped.
- DO NOT use cardboard, newspaper or fabric.
- Make sure documents with correction fluid or written in ink are completely dry.

Your 2-sided documents can be faxed, copied, or scanned up to Ledger size using the ADF.

1 Fan the pages well.

2 Adjust the paper guides (1) to fit the document size.

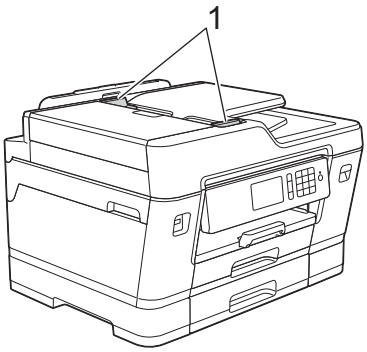

3 Place your document *face up* in the ADF, as shown in the illustration, until you feel the document touch the feed rollers and the machine beeps.

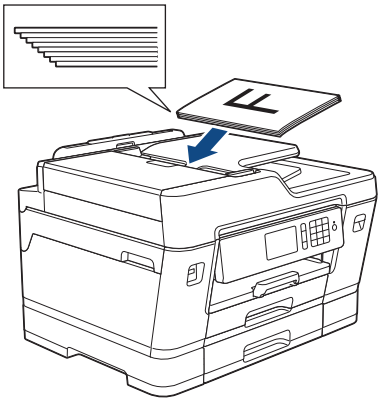

If you loaded a small size document and cannot remove it, lift the ADF document support (1), and then remove the document.

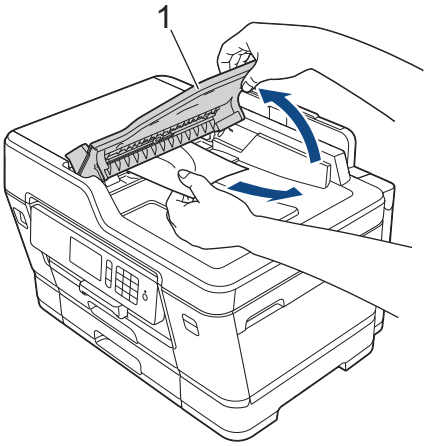

IMPORTANT

DO NOT leave any documents on the scanner glass. If you do this, the ADF may jam.

Load Documents on the Scanner Glass

Use the scanner glass to fax, copy, or scan one page at a time.

Document Sizes Supported

Length:	Up to 17.0 in. (431.8 mm)
Width:	Up to 11.7 in. (297 mm)
Weight:	Up to 4.4 lb (2 kg)

To use the scanner glass, the ADF must be empty.

1 Lift the document cover.

2 Place the document *face down* in the upper left corner of the scanner glass as shown in the illustration.

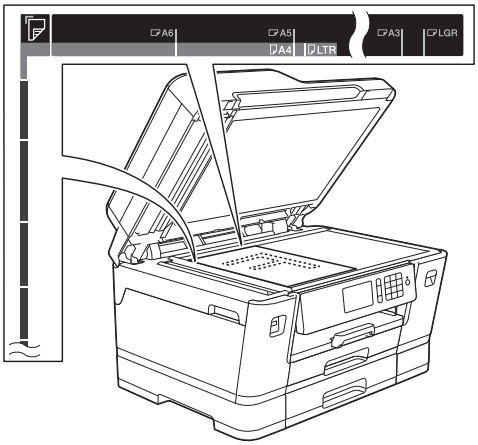

3 Close the document cover.

IMPORTANT

If you are scanning a book or thick document, DO NOT slam or press on the document cover.

3 Print

Print from Your Computer

Before attempting any printing operation, confirm the following:

- Make sure you have installed the Brother software and drivers.
- For USB or network cable users: Make sure the interface cable is inserted correctly.

Print a Document (Windows®)

1. Select the print command in your application.
2. Select **Brother MFC-XXXX Printer** (where XXXX is the name of your model).
3. Click **Print**.
4. Complete your print operation.

Print a Document (Macintosh)

1. From an application, such as Apple TextEdit, click the **File** menu, and then select **Print**.
2. Select **Brother MFC-XXXX** (where XXXX is the name of your model).
3. Click **Print**.
4. Complete your print operation.

Various Printing

To use the various printing features, click the printing properties or preferences button to change the printer setting.

Print on Both Sides of the Paper Automatically

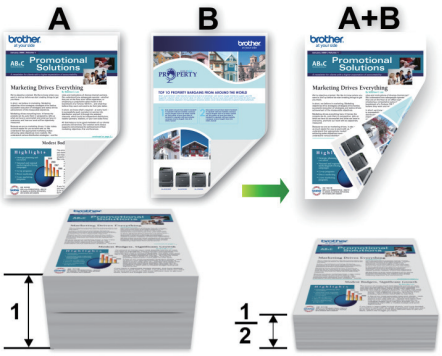

Print More Than One Page on a Single Sheet of Paper (N in 1)

For Windows®:

For more information, see the *Online User's Guide*: *Print from Your Computer (Windows®)*.

For Macintosh:

For more information, see the *Online User's Guide*: *Print from Your Computer (Macintosh)*.

Print Photos Directly from a USB Flash Drive

Preview and Print Photos from a USB Flash Drive

Preview your photos on the LCD before you print them. Print images that are stored on a USB flash drive.

1 Put a USB flash drive in the USB slot.

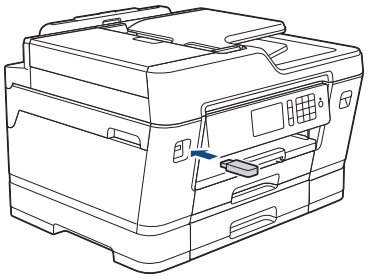

2 Press [JPEG Print] > [Select Files].

3 Swipe left or right or press ◀ or ▶ to display the photo you want to print, and then press it.

To print all photos, press [Print All], and then press [Yes] to confirm.

4 Press × 01 to display the keyboard on the Touchscreen, and then enter the number of copies using the Touchscreen keyboard. Press [OK].

You can also press [−] or [+] on the Touchscreen, or use the dial pad numbers.

5 Press [OK].

6 Repeat the last three steps until you have selected all the photos you want to print.

7 Press [OK].

8 Read and confirm the displayed list of options.

9 To change the print settings, press [Print Settings].

When finished, press [OK].

10 Press [Start].

Print Settings Overview

The Print Settings you change are temporary for your current printout. The machine returns to its default settings after printing is complete.

You can save the print settings you use most often by setting them as the default.

For more information, see the *Online User's Guide*.

4 Copy

Copy a Document

1 Make sure you have loaded the correct size paper in the paper tray.

2 Load your document.

3 Press [Copy].

The Touchscreen displays:

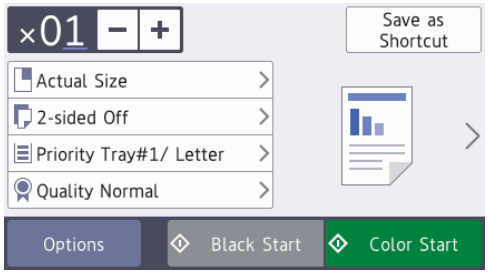

4 Change the copy settings, if needed.

When you load paper other than Letter size Plain Paper, you must change the [Paper Size] and [Paper Type] settings by pressing [Options].

- ×01 (No. of Copies)

  Press ×01 to display the keyboard on the Touchscreen, and then enter the number of copies using the Touchscreen keyboard. Press [OK].

  You can also press [−] or [+] on the Touchscreen, or use the dial pad numbers.

- [Options]

  Press Options to change the copy settings for the next copy only.

  When you have finished changing settings, press [OK].

After you have finished selecting new options, you can save them by pressing the [Save as Shortcut] button.

5 Press [Black Start] or [Color Start].

To stop copying, press ✕.

Other Copy Options

You can use various copy features by changing copy settings. Press the [Options] button.

Enlarge or Reduce Copied Images

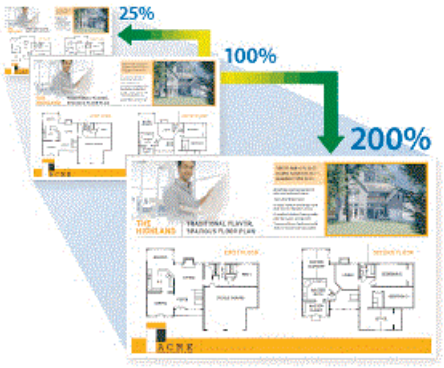

2-sided Copy

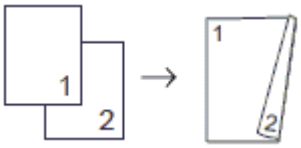

For more information, see the *Online User's Guide*: *Copy*.

5 Scan

Before Scanning

Before attempting to scan, confirm the following:

- Make sure you have installed the Brother software and drivers.
- For USB or network cable users: Make sure the interface cable is inserted correctly.

Scan from Your Computer (Windows®)

There are several ways you can use your computer to scan photos and documents on your Brother machine. Use the software applications provided by Brother, or use your favorite scanning application.

Scan Using ControlCenter4 Advanced Mode (Windows®)

Scan documents and save them to a folder on your computer as PDF files.

Select **Advanced Mode** as the mode setting for ControlCenter4.

1 Load your document.

2 Click the (**ControlCenter4**) icon in the task tray, and then click **Open**.

3 Click the **Scan** tab.

4 Click the **File** button.

The scan settings dialog box appears.

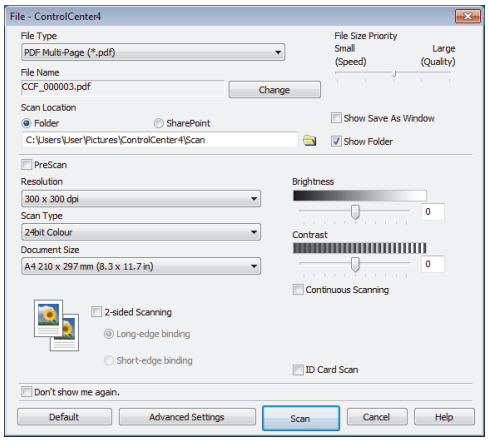

5 Change the scan settings, such as file format, file name, resolution and color, if needed.

6 Click **Scan**.

The machine starts scanning. The file is saved in the folder you selected.

Scan Using the Scan Button on Your Brother Machine

Scan Using the Scan Button on the Machine

Use the Scan button on the machine to make temporary changes to the scan settings. To make permanent changes, use Brother's ControlCenter software.

1. Load your document.

2. Press [Scan].

3. Swipe left or right or press ◀ or ▶ to display [to PC].

   The icon moves to the middle of the Touchscreen and is highlighted in blue.

4. Press [to PC].

5. Press [to File].

6. If the machine is connected over the network, swipe up or down or press ▲ or ▼ to display the computer where you want to send the data, and then press the computer name.

   If the LCD prompts you to enter a PIN, use the LCD to enter the four-digit PIN for the computer, and then press [OK].

7. Do one of the following:
   - To change the settings, press [Options], and then go to the next step.
   - Press [Start] to start scanning without changing additional settings.

     The machine starts scanning. If using the machine's scanner glass, follow the LCD instructions to complete the scanning job.

8. To scan both sides of the document, press [2-sided Scan], and then select the document type.

9. Change the scan settings you want to change, such as scan type, resolution, file type and document size, if needed. When finished, press [OK].

10. Press [Start].

    The machine starts scanning. If using the machine's scanner glass, follow the LCD instructions to complete the scanning job.

6 Fax

Before Faxing

Set Your Station ID

Set the machine's Station ID if you want the date and time to appear on each fax you send.

NOTE

(USA only)

The Telephone Consumer Protection Act of 1991 makes it unlawful for any person to use a computer or electronic device to send any message via a telephone fax machine unless such messages clearly contain, in a margin at the top or bottom of each transmitted page, or on the first page of the transmission, the date and time it is sent and an identification of the business or other entity or other individual sending the message and the telephone number of the sending machines or such business, other entity or individual. To program this information into the fax machine, see *Set the date and time* and *Set your Station ID*. For more information, see the *Online User's Guide*.

1. Press [Settings] > [All Settings] > [Initial Setup] > [Station ID].
2. Press [Fax].
3. Enter your fax number (up to 20 digits) on the Touchscreen, and then press [OK].
4. Press [Name].
5. Enter your name (up to 20 characters) using the Touchscreen, and then press [OK].
6. Press .

Related Information

- Enter Text on Your Brother Machine on page 65

Telephone Line Interference/ VoIP

If you are having problems sending or receiving a fax due to possible interference on the telephone line or if you are using a VoIP system, we recommend changing the modem speed to minimize errors in fax operations.

1. Press [Settings] > [All Settings] > [Initial Setup] > [Compatibility].
2. Press the option you want.
   - [Basic(for VoIP)] reduces the modem speed to 9,600 bps and turns off color fax receiving and ECM, except for color fax-sending. Unless interference is a recurring problem on your telephone line, you may prefer to use it only when needed.

     To improve compatibility with most VoIP services, Brother recommends changing the compatibility setting to [Basic(for VoIP)].
   - [Normal] sets the modem speed at 14,400 bps.
   - [High] sets the modem speed at 33,600 bps.
3. Press .

- VoIP (Voice over IP) is a type of phone system that uses an Internet connection, rather than a traditional phone line.

Related Information

- Error and Maintenance Messages on page 40
- Fax and Telephone Problems on page 52

Receive Modes Overview

Some receive modes answer automatically (`[Fax Only]` and `[Fax/Tel]`). You may want to change the Ring Delay before using these modes.

Fax Only

`[Fax Only]` mode automatically answers every call as a fax.

Fax/Tel

`[Fax/Tel]` mode helps you manage incoming calls, by recognizing whether they are fax or voice calls and handling them in one of the following ways:

- Faxes will be received automatically.
- Voice calls will start the F/T ring to tell you to pick up the line. The F/T ring is a pseudo/double-ring made by your machine.

Manual

`[Manual]` mode turns off all automatic answering functions (unless you are using the Distinctive Ring feature).

To receive a fax in `[Manual]` mode, lift the handset of the external telephone or press the Hook button. When you hear fax tones (short repeating beeps), press the Start button, and then select `[Receive]` to receive a fax. You can also use the Easy Receive feature to receive faxes by lifting a handset on the same line as the machine.

External TAD

`[External TAD]` mode lets an external answering device manage your incoming calls.

Incoming calls will be handled in the following ways:

- Faxes will be received automatically.
- Voice callers can record a message on the external TAD.

Related Information

- Fax and Telephone Problems on page 52

Choose the Correct Receive Mode

The correct Receive Mode for you is determined by the external devices and telephone subscriber services (Voice Mail, Distinctive Ring and so on) you will be using on the same line as the Brother machine.

Will you be using a Distinctive Ring number for receiving faxes? (USA and Canada only)

Brother uses the term "Distinctive Ring" but different telephone companies may have other names for this service.

Will you be using Voice Mail on the same telephone line as your Brother machine?

If you have Voice Mail on the same telephone line as your Brother machine, there is a strong possibility that Voice Mail and the Brother machine will conflict with each other when receiving incoming calls. Select Manual Mode as your Receive Mode.

If you do not want to answer every call manually to determine whether it's a voice call or a fax, contact your telephone provider and ask about Distinctive Ring services.

Will you be using a Telephone Answering Device on the same telephone line as your Brother machine?

Your external telephone answering device (TAD) will answer every call automatically. Voice messages are stored on the external TAD and fax messages are printed. Select [External TAD] as your Receive Mode.

Will you be using your Brother machine on a dedicated fax line?

Your machine automatically answers every call as a fax. Select [Fax Only] as your Receive Mode.

Will you be using your Brother machine on the same line as your telephone?

- **Do you want to receive voice calls and faxes automatically?**

  Select [Fax/Tel] mode when your Brother machine and your telephones share the same line.

  Important Note: You cannot receive voice messages on either Voice Mail or an answering machine if you select [Fax/Tel] mode.

- **Do you expect to receive very few faxes?**

  Select [Manual] as your Receive Mode. You control the telephone line and must answer every call yourself.

1 Press [Settings] > [All Settings] > [Fax] > [Setup Receive] > [Receive Mode].

If you cannot change the [Receive Mode] option, make sure the Distinctive Ring feature is set to [Off].

2 Press the [Fax Only], [Fax/Tel], [External TAD] or [Manual] option.

3 Press .

Related Information

- Fax and Telephone Problems on page 52
- Troubleshooting for Other Fax Problems on page 53

Set the F/T Ring Time (Pseudo/Double-ring)

When you set the Receive Mode to [Fax/Tel], if the call is a fax, your machine will receive it automatically. However, if it is a voice call, the machine will sound the F/T ring (pseudo/double-ring) for the time you set in the F/T Ring Time option. When you hear the F/T ring, it means that a voice caller is on the line.

Because the F/T ring is a setting only on your Brother machine, extension and external telephones will not ring; however, you can still answer the machine's call on any telephone.

1. Press [Settings] > [All Settings] > [Fax] > [Setup Receive] > [F/T Ring Time].
2. Press how long the machine will double-ring to alert you to a voice call ([20Secs], [30Secs], [40Secs], or [70Secs]).
3. Press .

Even if the caller hangs up during the pseudo/double-ringing, the machine will continue to ring for the set time.

Set the Number of Rings Before the Machine Answers (Ring Delay)

When somebody calls your machine, you will hear the normal telephone ring sound. The number of rings is set in the Ring Delay option.

- The Ring Delay setting sets the number of times the machine rings before it answers in [Fax Only] and [Fax/Tel] modes.
- If you have external or extension telephones on the same line as the machine, keep the Ring Delay setting of [4].

1. Press [Settings] > [All Settings] > [Fax] > [Setup Receive] > [Ring Delay].
2. Press the number of times you want the line to ring before the machine answers (0, 1, 2, 3, or 4).

If you select [0], the machine will answer immediately and the line will not ring at all (available only for some countries).

3. Press .

Store Numbers

You can set up your machine to store fax numbers in the Address Book.

If you lose electrical power, the Address Book numbers that are in the machine's memory will not be lost.

Store Address Book Numbers

1 Press [Fax] > [Address Book].

2 Do the following steps:

a. Press [Edit] > [Add New Address] > [Name].

b. Enter the name (up to 16 characters) using the Touchscreen. Press [OK].

c. Press [Address 1].

d. Enter the first fax or telephone number (up to 20 digits) using the Touchscreen. Press [OK].

- Press [Pause] to insert a pause between numbers. You can press [Pause] as many times as needed to increase the length of the pause.
- If you downloaded Internet Fax:

  To store an E-mail address to use with Internet Fax or Scan to E-mail server, press and enter the E-mail address and press [OK].

e. To store the second fax or telephone number, press [Address 2]. Enter the second fax or telephone number (up to 20 digits) using the Touchscreen. Press [OK].

f. Press [OK] to confirm.

To store another Address Book number, repeat these steps.

3 Press .

Change or Delete Address Book Names or Numbers

1 Press [Fax] > [Address Book] > [Edit].

2 Do one of the following:

- Press [Change] to edit the names or fax or telephone numbers.

  Swipe up or down or press ▲ or ▼ to display the number you want to change, and then press it.

  - To change the name, press [Name]. Enter the new name (up to 16 characters) using the Touchscreen. Press [OK].
  - To change the first fax or telephone number, press [Address 1]. Enter the new fax or telephone number (up to 20 digits) using the Touchscreen. Press [OK].
  - To change the second fax or telephone number, press [Address 2]. Enter the new fax or telephone number (up to 20 digits) using the Touchscreen. Press [OK].

  Press [OK] to finish.

To change a character, press ◀ or ▶ to position the cursor to highlight the character you want to change, and then press . Enter the new character.

- To delete numbers, press [Delete].
  - Select the fax or telephone numbers you want to delete by pressing them to display a red check mark, and then press [OK].

3 Press .

Telephone Services and External Devices

You may be able to use the following services and connections with your Brother machine.

These are summaries of ways to connect your machine. For more information about each topic, see the *Online User's Guide*.

Voice Mail

If you have a Voice Mail service and your Brother machine on the same line, they will conflict with one another when receiving incoming calls. If you want the Brother machine to share a single line with your Voice Mail, you must either put the Brother machine in Manual Mode or subscribe to your telephone company’s Distinctive Ring service.

Caller ID

The Caller ID feature lets you use the Caller ID subscriber service offered by many local telephone companies. This service displays the telephone number, or name if it is available, of your caller as the line rings.

Distinctive Ring

Distinctive Ring is a telephone-company service that allows you to have two different phone numbers on a single line. Each telephone number has its own ring pattern. You can program your Brother machine to receive faxes automatically on one of the two numbers.

Voice Over Internet Protocol (VoIP)

VoIP is a phone system that uses an Internet connection instead of a traditional telephone line. Telephone providers frequently bundle VoIP with Internet and cable services. Your Brother machine may not work with some VoIP systems. For more information, contact your VoIP provider.

Connection of an External Telephone Answering Device (TAD)

Your Brother machine can receive faxes automatically when it shares a line with an external TAD. You must connect the TAD to the jack labeled EXT. on the Brother machine and set the machine's Receive Mode to External TAD.

External and Extension Telephones

You can connect a separate telephone to the jack labeled EXT. on the Brother machine. If you answer an incoming fax on the external telephone, you can make the machine receive it by pressing *** 5 1**, or by pressing the Start button, and then choosing Receive. If you answer an incoming fax on an extension telephone that shares the line with the Brother machine, you can transfer the fax to the machine by pressing *** 5 1**.

If the machine answers a voice call and pseudo/double-rings for you to take over, press **# 5 1** to take the call on an extension telephone.

Fax Using Your Machine

Send a Fax

1 Load your document in the ADF or place it on the scanner glass.

2 Press [Fax].

If [Fax Preview] is set to [On], press [Fax] > [Sending Faxes].

The Touchscreen displays:

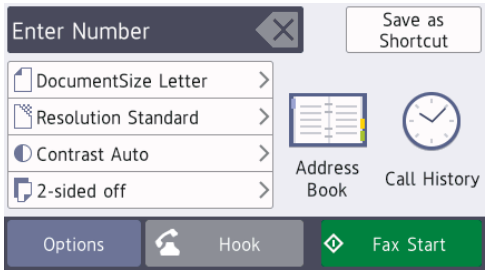

3 Enter the fax number in one of the following ways:

- Dial Pad (Enter the fax number manually.)

  Press all digits of the number using the dial pad.

- [Redial] (Redial the last number you dialed.)

  Press [Call History] > [Redial].

- [Outgoing Call] (Select a number from the Outgoing Call history.)

  Press [Call History] > [Outgoing Call].

  Select the number you want, and then press [Apply].

- [Caller ID History] (Select a number from the Caller ID history.)

  Press [Call History] > [Caller ID History].

  Select the number you want, and then press [Apply].

- [Address Book] (Select a number from the Address Book.)

  Press [Address Book].

  Do one of the following:

  - Select the number you want, and then press [Apply].
  - Press , and then enter the first letter of the name and press [OK]. Press the name you want to dial. If the name has two numbers, press the number you want. Press [Apply].

If the LDAP search is available, the result will be shown on the Touchscreen with .

4 Press [Document Size].

Select the document size option you want.

5 To change the fax settings, press [Options].

When finished, press [OK].

6 Press [Fax Start].

7 Do one of the following:

- If you are using the ADF, the machine starts scanning and sending the document.
- If you are using the scanner glass and selected [Black] in the [Color Setting], the machine starts scanning the first page.

  Go to the next step.

- If you are using the scanner glass and selected [Color] in the

[Color Setting], the Touchscreen asks if you want to send a color fax.

Press [Yes (Color fax)] to confirm. The machine starts dialing and sending the document.

8 When the Touchscreen displays [Next Page?], do one of the following:

- Press [No] when finished scanning pages. The machine starts sending the document.
- Press [Yes] to scan another page. Place the next page on the scanner glass, and then press [OK]. The machine starts scanning the page.

Repeat this step for each additional page.

Fax Using Your Computer (PC-FAX)

Send Faxes from Your Computer

The Brother PC-FAX feature lets you send a file, created in any application on your computer, as a standard fax and even attach a cover page.

For Windows®:

For more information, see the *Online User's Guide*: *PC-FAX for Windows®*.

For Macintosh:

For more information, see the *Online User's Guide*: *PC-FAX for Macintosh*.

1 From your application select **File**, and then **Print**.

(The steps may vary depending on your application.)

The Print dialog box appears.

2 Select **Brother PC-FAX**.

3 Click **Print**.

The **Brother PC-FAX** user interface appears.

4 Enter the recipient's fax number.

a. Use your computer keyboard or click the **Brother PC-FAX** user interface's numeric keypad.

b. Click **Add Send Address**.

You can also select a stored number from the **Address Book**.

5 Click **Start**.

Your document is sent to the Brother machine and then faxed to the recipient.

Contact the application's vendor if you need more support.

Receive Faxes on Your Computer (Windows® only)

Use Brother's PC-FAX software to receive faxes on your computer, display them, and print only those faxes you want.

- Even if you turn off your computer (at night or on the weekend, for example), your machine will receive and store your faxes in its memory. The number of received faxes that are stored in the memory appears on the LCD.
- When you start your computer and the PC-Fax Receive software runs, your MFC transfers your faxes to your computer automatically.
- For PC-Fax Receive to work, the PC-FAX Receive software must be running on your computer.
- Before you can set up PC-Fax Receive, you must install the Brother software and drivers on your computer. Make sure your Brother machine is connected to your computer and turned on.
- If your machine displays an error and is unable to print faxes from memory, use PC-FAX to transfer your faxes to a computer.
- *PC-Fax Receive is not available for Macintosh*.

1 Do one of the following:

- Windows Vista® and Windows® 7

  Click **(Start)** > **All Programs** > **Brother** > **Brother Utilities** > **PC-FAX** > **Receive**.

- Windows® 8 and Windows® 10

  Launch (**Brother Utilities**), and then click the drop-down list and select your model name (if not already selected).

  Click **PC-FAX** in the left navigation bar, and then click **Receive**.

2 Confirm the message and click **Yes**.

The **PC-FAX Receive** window appears. The (**PC-FAX Receive**) icon also appears in your computer task tray.

A Routine Maintenance

Clean the Scanner

1. Unplug the machine from the AC power outlet.

2. Lift the document cover (1). Clean the scanner glass (2) and the white plastic (3) with a soft lint-free cloth moistened with water.

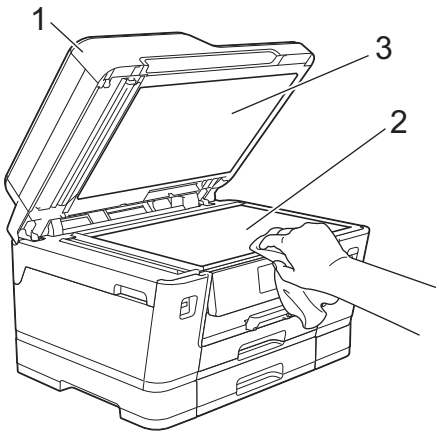

3. In the ADF unit, clean the white bar (1) and the glass strip (2) with a lint-free cloth moistened with water.

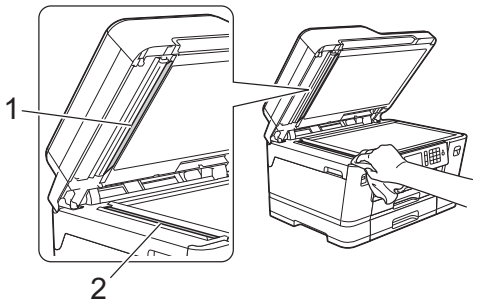

4. Open the scanner glass cover (1), and clean the white bar (2) and the glass strip (3) with a soft lint-free cloth moistened with water.

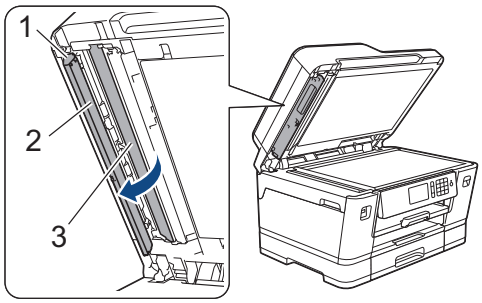

Related Information

- Troubleshooting for Other Print Problems on page 50
- Troubleshooting for Other Fax Problems on page 53

Check the Print Quality

If faded or streaked colors and text appear or if text is missing on your printouts, the print head nozzles may be clogged. Print the Print Quality Check Sheet and look at the nozzle check pattern.

1. Press [Ink] > [Improve Print Quality] > [Check Print Quality].

You can also press [Settings] > [Maintenance] > [Improve Print Quality] > [Check Print Quality].

2. Press [Start].

   The machine prints the Print Quality Check Sheet.

3 Check the quality of the four color blocks on the sheet.

4 The Touchscreen asks about the print quality. Do one of the following:

- If all lines are clear and visible, press [No], and then press to finish the Print Quality check.
- If lines are missing (see **Poor**, below), press [Yes].

OK

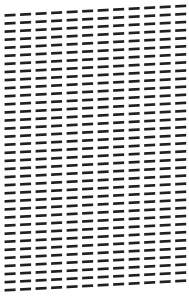

Poor

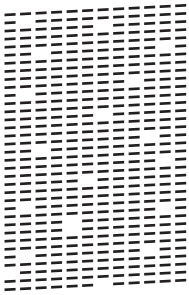

5 The Touchscreen asks you to check the print quality of each color. Press the number of the pattern (1–4) that most closely matches the printing result.

6 Do one of the following:

- If print head cleaning is needed, press [Start] to start the cleaning procedure.
- If print head cleaning is not needed, the Maintenance screen reappears on the Touchscreen. Press .

7 After the cleaning procedure is finished, the Touchscreen asks if you want to print the Print Quality Check Sheet again. Press [Yes], and then press [Start].

The machine prints the Print Quality Check Sheet again. Check the quality of the four color blocks on the sheet again.

If you clean the print head and the print has not improved, try installing a new Genuine Brother Brand replacement ink cartridge for each problem color. Try cleaning the print head again. If the print has not improved, contact Brother Customer Service.

IMPORTANT

DO NOT touch the print head. Touching the print head may cause permanent damage and may void the print head's warranty.

When a print head nozzle is clogged, the printed sample looks like this.

After the print head nozzle is cleaned, the lines are gone.

Related Information

- Troubleshooting for Other Print Problems on page 50

Check the Print Alignment from Your Brother Machine

If your printed text becomes blurred or images become faded after transporting the machine, adjust the print alignment.

1 Press [Ink] > [Improve Print Quality] > [Alignment].

You can also press [Settings] > [Maintenance] > [Improve Print Quality] > [Alignment].

2 Press [Next].

3 Swipe up or down or press ▲ or ▼ to display the paper size that needs a print alignment adjustment, and then press it.

4 Press [Basic alignment] or [Advanced alignment].

5 Load the selected paper size in the tray, and then press [Start].

The machine prints the Alignment Check Sheet.

(A)

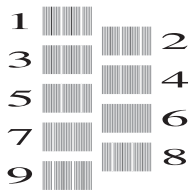

6 For the “A” pattern, swipe up or down or press ▲ or ▼ to display the number of the test print with the least visible vertical stripes (1-9), and then press it (in the example, number 6 is the best choice). Press [OK].

Repeat this step for the rest of the patterns.

When the print alignment is not adjusted correctly, text looks blurry like this.

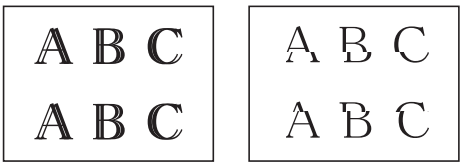

After the print alignment is adjusted correctly, text looks like this.

7 Press .

Related Information

- Troubleshooting for Other Print Problems on page 50

B Troubleshooting

Use this section to resolve problems you may encounter when using your Brother machine.

Identify the Problem

Even if there seems to be a problem with your machine, you can correct most problems yourself.

First, check the following:

- The machine's power cord is connected correctly and the machine's power is on.
- All of the machine's orange protective parts have been removed.
- The ink cartridges are installed correctly.
- The Scanner Cover and the Jam Clear Cover are fully closed.
- Paper is inserted correctly in the paper tray.
- The interface cables are securely connected to the machine and the computer, or the wireless connection is set up on both the machine and your computer.
- (For network models) The access point (for wireless), router, or hub is turned on and its link button is blinking.
- To find the error and the solution, check the LCD or the machine's status in **Status Monitor** on your computer.

Using the LCD	Using the Status Monitor
1. Follow the messages on the LCD. 2. See the instructions in the following Error and Maintenance Messages table. 3. If you cannot resolve the error, please refer to the *Online User's Guide*: *Error and Maintenance Messages*. 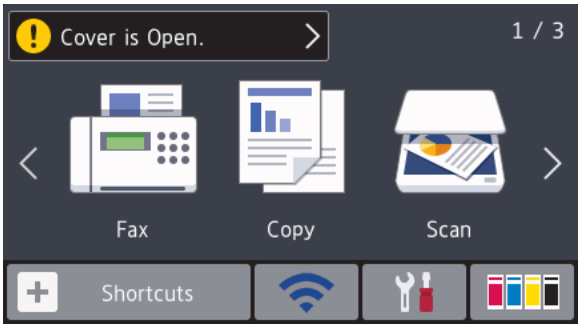	• Double-click the icon in the task tray. • Each color of the icon indicates the machine's status. • Click the **Troubleshooting** button to access Brother's troubleshooting website. 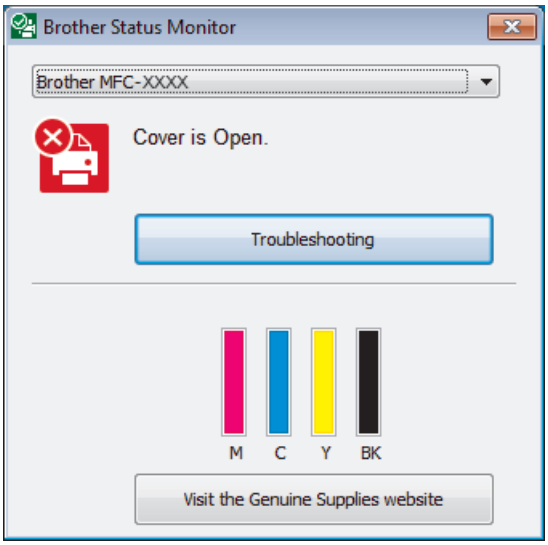

Error and Maintenance Messages

The most common error and maintenance messages are shown in the table. For more detailed information, see the *Online User's Guide*.

You can correct most errors and perform routine maintenance yourself. If you need more tips, go to your model's **FAQs & Troubleshooting** page on the Brother Solutions Center at support.brother.com.

If the Touchscreen displays errors and your Android™ device supports the NFC feature, touch your device to the NFC symbol on the control panel to access the Brother Solutions Center and browse the latest FAQs from your device. (Your mobile telephone provider's message and data rates may apply.)

Make sure the NFC settings of both your Brother machine and your Android™ device are set to On.

Error Message	Action
`Black and White Print Only` `Replace ink.`	One or more of the color ink cartridges have reached the end of their lives. Replace the ink cartridges. For more information, see the *Online User's Guide*: *Replace the Ink Cartridges*. The machine may stop all print operations and you may not be able to use the machine until you install a new ink cartridge in the following cases: • If you unplug the machine or remove the ink cartridge. • If you select the **Slow Drying Paper** option on the machine or in the printer driver.
`Cannot Detect`	Take out the new ink cartridge and reinstall it slowly and firmly until it locks into place. For more information, see the *Online User's Guide*: *Replace the Ink Cartridges*.
	Remove the used ink cartridge and install a new one.
	Use a new Genuine Brother Ink Cartridge. If the error is not cleared, call Brother Customer Service.
	Slowly turn the ink cartridge so that the ink supply port is pointing downward, and then reinstall the cartridge.
	Check the model numbers of the ink cartridges and install the correct ink cartridges. See *Related Information*: *Supply Specifications* at the end of this section.
`Cannot Detect Ink Volume`	Use a new Genuine Brother Ink Cartridge. If the error is not cleared, call Brother Customer Service.

Error Message	Action
Data Remaining in Memory	Press ✕. The machine will cancel the job and clear it from the memory. Try to print again.
Disconnected	Try to send or receive again. If calls are stopped repeatedly and you are using a VoIP (Voice over IP) system, try changing the Compatibility to Basic (for VoIP). See *Related Information*: *Telephone Line Interference/VoIP* at the end of this section.
Document Jam/too Long	The document was not inserted or fed correctly, or the document scanned from the ADF was too long. See *Related Information*: *Document Jams* at the end of this section.
DR Mode in Use	The machine is in Distinctive Ring mode. You cannot change the Receive Mode from Manual to another mode. Set Distinctive Ring to Off. For more information, see the *Online User's Guide*: *Turn off Distinctive Ring*.
High Temperature	After cooling the room, allow the machine to cool down to room temperature. Try again when the machine has cooled down.
Hub is Unusable.	Hubs, including a USB flash drive with a built-in hub, are not supported. Unplug the device from the USB direct interface.
Ink Absorber NearFull	The ink absorber box or flushing box must be replaced soon. Call Brother Customer Service or a Brother Authorized Service Center to have your machine serviced.
Ink Absorber Pad Full	The ink absorber box or flushing box must be replaced. Call Brother Customer Service or a Brother Authorized Service Center to have your machine serviced. Reasons for cleaning are: 1. The machine automatically cleans itself after you remove the power cord and plug it back in. 2. After a paper jam has been cleared, the machine automatically cleans itself before the next received page is printed. 3. The machine automatically cleans itself after sitting idle for more than 30 days (infrequent use). 4. The machine automatically cleans itself after ink cartridges of the same color have been replaced 12 times.
Ink Low	One or more of the ink cartridges are near the end of their lives. Order a new ink cartridge. You can continue printing until the Touchscreen displays Replace Ink. For more information, see the *Online User's Guide*: *Replace the Ink Cartridges*. • **You can still scan even if the ink is low or needs to be replaced.**

Error Message	Action
Install Ink	Remove the new ink cartridge and re-install it slowly and firmly until it locks into place. For more information, see the *Online User's Guide*: *Replace the Ink Cartridges*.
Jam Front/Rear Jam Front Jam Rear Jam MP Tray Jam Front/MP Tray Jam Tray2 Repeat Jam XX	Remove the jammed paper. See *Related Information*: *Printer Jam or Paper Jam* at the end of this section.
	If there is a repeat paper jam, try another paper jam clear operation. See *Related Information*: *Remove Paper Scraps* at the end of this section.
	Make sure the paper guides are set to the correct paper size.
	Make sure the paper support is fully inserted into the machine. See *Related Information*: *Paper is Jammed in the Front of the Machine* at the end of this section.
	Clean the paper pick-up rollers. For more information, see the *Online User's Guide*: *Clean the Paper Pick-up Rollers*.
Low Temperature	After warming the room, allow the machine to warm up to room temperature. Try again when the machine has warmed up.
Media is Full.	Your machine can only save to your USB flash drive if it contains fewer than 999 files. Delete unused files and try again.
	Delete unused files from your USB flash drive to make some free space, and then try again.
No Caller ID	There is no incoming call history. You did not receive calls or you have not subscribed to the Caller ID service from your telephone company. To use the Caller ID feature, call your telephone company. For more information, see the *Online User's Guide*: *Caller ID*.
No Paper Fed No Paper Fed [Tray #1] No Paper Fed [MP Tray] No Paper Fed [Tray #2]	Do one of the following: • Refill the paper tray, and then follow the LCD instructions. • Remove and reload the paper, and then follow the LCD instructions.
	The paper was not inserted in the center position of the MP tray. Remove the paper and reinsert it in the center of the MP tray, and then follow the LCD instructions. See *Related Information*: *Load Paper in the Multi-purpose Tray (MP Tray)* at the end of this section.
	The Jam Clear Cover is not closed correctly.

Error Message	Action
`Out of Fax Memory`	Do one of the following: • Clear the data from the memory. To gain extra memory, you can turn off Memory Receive. For more information, see the *Online User's Guide*: *Turn Off Memory Receive*. • Print the faxes stored in the memory. For more information, see the *Online User's Guide*: *Print a Fax Stored in the Machine's Memory*.
`Out of Memory`	**If a fax-sending or copy operation is in progress:** • Press ✕ or `Quit` or `Close` and wait until the other operations that are in progress finish, and then try again. • Press `Send Now` to send the pages scanned so far. • Press `Partial Print` to copy the pages scanned so far. • Clear the data in the memory. To gain extra memory, you can turn off Memory Receive. For more information, see the *Online User's Guide*: *Turn Off Memory Receive*. • Print the faxes stored in the memory. For more information, see the *Online User's Guide*: *Print a Fax Stored in the Machine's Memory*.

`Paper Size Mismatch`
`Paper Size Mismatch [Tray #1]`
`Paper Size Mismatch [MP Tray]`
`Paper Size Mismatch [Tray #2]`
	1. Check that the paper size you selected on the machine's display matches the size of the paper in the tray.
	See *Related Information*: *Change the Paper Size and Paper Type* at the end of this section.
	2. Make sure you loaded the paper in the proper orientation and set the paper guides at the indicators for your paper size.
	See *Related Information*: *Load Paper* at the end of this section.
	3. After you have checked the paper size and the paper orientation, follow the LCD instructions.

	If printing from your computer, make sure the paper size you selected in the printer driver matches the size of paper in the tray. For more information, see the *Online User's Guide*: *Print Settings (Windows®)* or *Print Options (Macintosh)*.
`Paper Tray #1 not detected` `Paper Tray #2 not detected`	Slowly push the paper tray completely into the machine.
	Paper or a foreign object has prevented the paper tray from being inserted properly. Pull the paper tray out of the machine, and remove the jammed paper or foreign object. If you cannot find or remove the jammed paper, see *Related Information*: *Printer Jam or Paper Jam* at the end of this section.

Error Message	Action
Repetitive No Paper Fed	Clean the paper pick-up rollers. For more information, see the *Online User's Guide*: *Clean the Paper Pick-up Rollers*.
Repetitive Paper Jams	Remove any foreign objects and paper scraps in the machine. See *Related Information*: *Remove Paper Scraps* at the end of this section.
Replace Ink	One or more of the ink cartridges have reached the end of their lives. Replace the ink cartridges. For more information, see the *Online User's Guide*: *Replace the Ink Cartridges*. • **You can still scan even if the ink is low or needs to be replaced.**
Sending Error Wrong Document Size Settings	Select the correct document size option, and then press Fax Start again.
Touchscreen Initialization Failed	The Touchscreen was pressed before the power on initialization was completed. Make sure nothing is touching or resting on the Touchscreen, especially when plugging the machine in.
	Debris may be stuck between the lower part of the Touchscreen and its frame. Insert a piece of stiff paper between the lower part of the Touchscreen and its frame and slide it back and forth to push out the debris.
Tray #1 Settings Tray #2 Settings MP Tray Settings	This message is displayed when the setting to confirm the paper type and size is enabled. To not display this confirmation message, change the setting to Off. See *Related Information*: *Change the Check Paper Size Setting* at the end of this section.
Unable to Clean XX Unable to Initialize XX Unable to Print XX	A foreign object, such as a paper clip or a piece of ripped paper, is in the machine. Open the scanner cover and remove any foreign objects and paper scraps from inside the machine. If the error message continues, disconnect the machine from the power for several minutes, and then reconnect it. You can try additional paper jam clear operations. See *Related Information*: *Remove Paper Scraps* at the end of this section. If you cannot print received faxes, transfer them to another fax machine or to your computer. For more information, see the *Online User's Guide*: *Transfer Your Faxes or Fax Journal Report*.

Error Message	Action
Unable to Scan XX	Disconnect the machine from the power for several minutes, and then reconnect it. If you cannot print received faxes, transfer them to another fax machine or to your computer. For more information, see the *Online User's Guide*: *Transfer Your Faxes or Fax Journal Report*.
Unusable Device Disconnect device from front connector & turn machine off & then on	A broken device is connected to the USB direct interface. Unplug the device from the USB direct interface, then press ⏻ to turn the machine off and then on again.
Unusable Device Please disconnect USB device.	A USB device or USB flash drive that is not supported has been connected to the USB direct interface. Unplug the device from the USB direct interface. Turn the machine off and then on again.
Wrong Ink Cartridge	The ink cartridge model number is not compatible with your machine. Verify whether the cartridge model number will work with your machine. See *Related Information*: *Supply Specifications* at the end of this section.
Wrong Ink Color	Check which ink cartridges are not matched by color to their ink cartridge positions and move them to their correct positions.
Wrong Tray Settings	Follow the instructions on the Touchscreen and try to print again.
	Configure the paper size setting for the tray according to the LCD instructions.

Related Information

- Load Paper on page 8
- Load Paper in the Multi-purpose Tray (MP Tray) on page 15
- Change the Paper Size and Paper Type on page 18
- Change the Check Paper Size Setting on page 18
- Telephone Line Interference/VoIP on page 27
- Document Jams on page 55
- Printer Jam or Paper Jam on page 56
- Paper is Jammed in the Front of the Machine on page 56
- Remove Paper Scraps on page 63
- Supply Specifications on page 67

Transfer Your Faxes or Fax Journal Report

If the LCD shows:

- [Unable to Clean XX]
- [Unable to Initialize XX]
- [Unable to Print XX]
- [Unable to Scan XX]

We recommend transferring your faxes to another fax machine or to your computer.

You can also transfer the Fax Journal report to see if there are any faxes you must transfer.

For more information, see the *Online User's Guide*: *Transfer Your Faxes or Fax Journal Report*.

Troubleshooting for Wireless LAN setup

Wireless LAN Report Error Codes

If the Wireless LAN Report shows that the connection failed, check the error code on the printed report and see the corresponding instructions in the table:

Error Code	Problem and Recommended Solutions
TS-01	The wireless setting is not activated, change the wireless setting to ON. If a network cable is connected to your machine, disconnect it and change the wireless setting of your machine to ON.
TS-02	The wireless access point/router cannot be detected. Do one of the following: • Unplug the power to your wireless access point/router, wait for 10 seconds, and then plug it back in. • If your WLAN access point/router is using MAC address filtering, confirm that the MAC address of the Brother machine is allowed in the filter. • Check that you are selecting the correct SSID (network name) and are entering the correct network key.
TS-03	The wireless network and security setting you entered may be incorrect. Reconfirm the wireless network settings. If you do not know this information, ask your network administrator.
TS-04	Unsupported authentication/encryption method has been detected on your wireless access point/router. Your wireless access point/router is using an authentication/encryption method that is not supported by the device. Check that you are selecting the correct SSID (network name).
TS-05	The specified SSID and network key are incorrect. Check that you are selecting the correct SSID (network name) and are entering the correct network key.
TS-06	The specified wireless security information is incorrect. Check the authentication/encryption method that you are selecting and make sure you are entering the correct network key.
TS-07	The machine cannot detect a wireless access point/router that has WPS enabled. To configure your wireless settings using WPS, confirm that your wireless access point/router supports WPS and try again.
TS-08	Two or more wireless access points that have WPS enabled are detected. Try again after a few minutes to avoid interference from other access points.

Print or Scan Problems

IMPORTANT

Using non-Brother supplies may affect the print quality, hardware performance, and machine reliability.

If you cannot print or scan a document, check the following:

1 All of the machine's protective parts have been removed.

2 The interface cables are securely connected to the machine and the computer.

3 The printer or scanner driver has been installed correctly.

4 (Scan problem only)

Confirm the machine is assigned with an available IP address. (Windows®)

a. Do one of the following:

- Windows Vista® and Windows® 7

  Click **(Start)** > **All Programs** > **Brother** > **Brother Utilities**.

  Click the drop-down list and select your model name (if not already selected). Click **Scan** in the left navigation bar, and then click **Scanners and Cameras**.

- Windows® 8 and Windows® 10

  Launch (**Brother Utilities**), and then click the drop-down list and select your model name (if not already selected). Click **Scan** in the left navigation bar, and then click **Scanners and Cameras**.

b. Click the **Properties** button.

c. Click the **Network Setting** tab to confirm the machine's IP address.

Try printing with your machine. If the problem still remains, uninstall and reinstall the printer driver.

5 If the problem still remains after trying all the above, try the following:

For a USB interface connection:

- Change the USB cable for a new one.
- Use a different USB port.

For a wired network connection:

- Change the LAN cable for a new one.
- Use a different LAN port on your hub.
- Make sure your machine's wired connection is on.

For a wireless network connection:

- Confirm your machine's wireless status on the LCD.

Your machine is not connected to the wireless access point. Set up the wireless network connection.

The wireless connection setting is disabled. Enable the WLAN connection and set up the wireless network connection.

The wireless access point cannot be detected. Set up the wireless network connection again.

The wireless network is connected. A three-level indicator in the LCD displays the current wireless signal strength.

You can configure wireless settings by pressing the wireless status button.

If you cannot print on both sides of paper, check the following:

6 Change the paper size setting in the printer driver to Letter.

Troubleshooting for Other Print Problems

Difficulties	Suggestions
Poor print quality	Check the print quality. See *Related Information*: *Check the Print Quality* at the end of this section.
	Make sure the Media Type setting in the printer driver or the Paper Type setting in the machine's menu matches the type of paper you are using. For more information, see the *Online User's Guide*: *Print Settings (Windows®)* or *Print Options (Macintosh)*.
White lines appear in text or graphics. 	Check the print quality. See *Related Information*: *Check the Print Quality* at the end of this section.
The machine prints blank pages.	Check the print quality. See *Related Information*: *Check the Print Quality* at the end of this section.
Characters and lines are blurred. 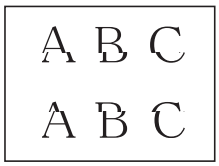 	Check the printing alignment. See *Related Information*: *Check the Print Alignment from Your Brother Machine* at the end of this section. For more information, see the *Online User's Guide*: *Check the Print Alignment from Your Computer (Windows®)* or *Check the Print Alignment from Your Computer (Macintosh)*.
	Change the print setting options. For more information, see the *Online User's Guide*: *Change the Print Setting Options When Having Printing Problems*.
Printing appears dirty or ink seems to run.	If you are using photo paper, make sure the glossy side of the photo paper is face down in the tray and you have set the correct paper type. If you are printing a photo from your computer, set the Media Type in the printer driver.
Photo paper does not feed correctly.	When you print on Brother Photo paper, load one extra sheet of the same photo paper in the paper tray. An extra sheet has been included in the paper package for this purpose.
Black lines or streaks appear in copies. 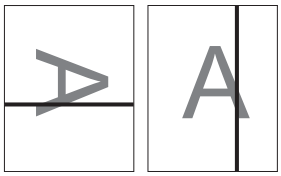	Black lines on copies are typically caused by dirt or correction fluid on the glass strip. Clean the glass strip, scanner glass, and the white bar and white plastic above them. See *Related Information*: *Clean the Scanner* at the end of this section.

Difficulties	Suggestions
Black marks or spots appear in copies.	Black marks or spots on copies are typically caused by dirt or correction fluid on the scanner glass. Clean the scanner glass and white plastic above it. See *Related Information*: *Clean the Scanner* at the end of this section.
Dark lines appear at regular intervals.	Check and adjust the paper feed. For more information, see the *Online User's Guide*: *Correct the Paper Feed to Clear Vertical Lines*.

Related Information

- Clean the Scanner on page 36
- Check the Print Quality on page 36
- Check the Print Alignment from Your Brother Machine on page 38

Fax and Telephone Problems

If you cannot send or receive a fax, check the following:

1 Connect one end of the telephone line cord to the area labeled "LINE", and then connect the other end of the telephone line cord directly to a telephone wall jack.

If you can send and receive faxes when the telephone line is directly connected to the fax, the problem may be unrelated to the machine. Please contact your telephone service provider for connection issues.

2 Check the receive mode.

See *Related Information*:

- *Receive Modes Overview*
- *Choose the Correct Receive Mode*

3 Try changing the compatibility settings.

You may be able to send and receive faxes by lowering the connection speed.

For more information, see *Related Information*: *Telephone Line Interference/VoIP*.

If the problem still is not resolved, turn the machine off, and then turn it on.

Related Information

- Telephone Line Interference/VoIP on page 27
- Receive Modes Overview on page 28
- Choose the Correct Receive Mode on page 29

Troubleshooting for Other Fax Problems

Difficulties	Suggestions
Cannot send a fax.	Check all line cord connections. Make sure the telephone line cord is plugged into the telephone wall jack and the LINE jack of the machine. Make sure your machine has a dial tone by pressing the Hook button in Fax mode. If you subscribe to DSL, VoIP, or magicJack services, call your service provider for connection instructions.
	Print the Transmission Verification Report and check for an error.
	Contact your administrator to check your Secure Function Lock Settings.
	Ask the other party to check that the receiving machine has paper.
Cannot receive a fax.	Check all line cord connections. Make sure the telephone line cord is plugged into the telephone wall jack and the LINE jack of the machine. Make sure your machine has a dial tone by pressing the Hook button in Fax mode. If you hear static or interference on your fax line, contact your local telephone provider.
	If you are using a telephone answering machine (External TAD mode) on the same line as the Brother machine, make sure your answering machine is set up correctly. 1. Plug the telephone line cord directly from the telephone wall jack to your Brother machine's LINE jack. 2. Remove the protective cap from your Brother machine's EXT jack, and then plug the telephone line cord from your answering machine into the EXT jack. 3. Set your answering machine to answer within four rings. If you are having problems receiving faxes or voice messages, set your answering machine to answer within two or three rings. 4. Record the outgoing message on your answering machine. • Record five seconds of silence at the beginning of your outgoing message. • Limit your speaking to 20 seconds. • End your outgoing message with your Fax Receive Code for people sending manual faxes. For example: "After the beep, leave a message or press *51 and Start to send a fax." 5. Set your answering machine to answer calls. 6. Set your Brother machine's Receive Mode to External TAD. See *Related Information*: *Choose the Correct Receive Mode* at the end of this section.
	Make sure your Brother machine's Easy Receive feature is turned On. Easy Receive is a feature that allows you to receive a fax even if you answered the call on an external or extension telephone.

Difficulties	Suggestions
Left and right margins are cut off or a single page is printed on two pages.	Turn on Auto Reduction.
Dialing does not work. (No dial tone)	Check all line cord connections. Change Tone/Pulse setting. (Available only for some countries)
Poor sending quality.	Try changing your resolution to Fine or S.Fine.
	Make a copy to check your machine's scanner operation. If the copy quality is not good, clean the scanner. See *Related Information*: *Clean the Scanner* at the end of this section.
Vertical black lines when sending.	Black vertical lines on faxes you send are typically caused by dirt or correction fluid on the glass strip. Clean the glass strip. See *Related Information*: *Clean the Scanner* at the end of this section.

Related Information

- Choose the Correct Receive Mode on page 29
- Clean the Scanner on page 36

Document and Paper Jams

Document Jams

Related Information

- Error and Maintenance Messages on page 40

Document is Jammed in the Top of the ADF Unit

1. Remove any paper that is not jammed from the ADF.
2. Open the ADF cover.
3. Remove the jammed document by pulling it upward.

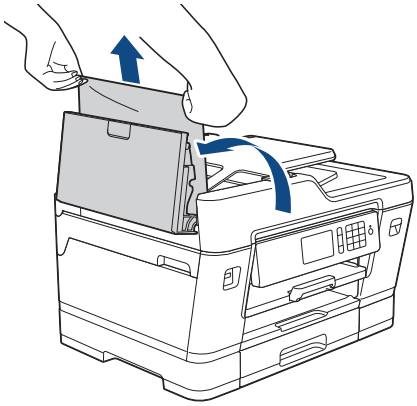

4. Close the ADF cover.
5. Press ✕.

IMPORTANT

To avoid future document jams, close the ADF cover correctly by pressing it down in the center.

Document is Jammed in the Bottom of the ADF Unit

1. Remove any paper that is not jammed from the ADF.
2. Lift the ADF document support, and remove the jammed paper.

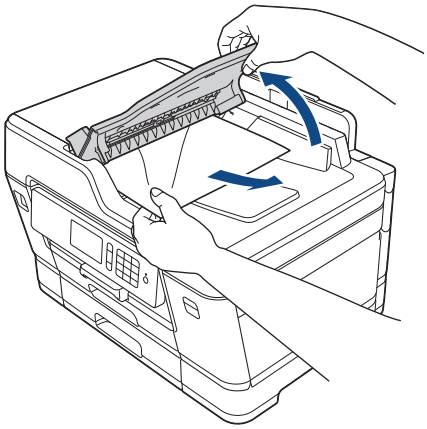

3. Press ✕.

Document is Jammed inside the ADF Unit

1. Remove any paper that is not jammed from the ADF.
2. Lift the document cover.

3 Pull the jammed document out to the right.

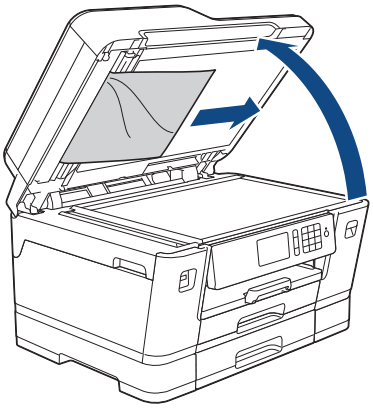

4 Close the document cover.

5 Press ✕.

Remove Paper Scraps Jammed in the ADF

1 Lift the document cover.

2 Insert a piece of stiff paper, such as cardstock, into the ADF to push any small paper scraps through.

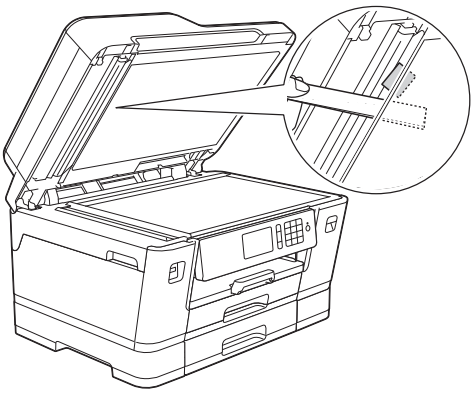

3 Close the document cover.

4 Press ✕.

Printer Jam or Paper Jam

Locate and remove the jammed paper.

Related Information

- Error and Maintenance Messages on page 40

Paper is Jammed in the Front of the Machine

If the LCD displays the following paper jam messages, follow these steps:

- `[Jam Front/Rear]`, `[Repeat Jam Front/Rear]`
- `[Jam Front]`, `[Repeat Jam Front]`
- `[Jam Front/MP Tray]`, `[Repeat Jam Front/MP Tray]`

1 Unplug the machine from the AC power outlet.

2 If the paper is loaded in the MP tray, remove the paper.

3 Pull Tray #1 (1) completely out of the machine as shown by the arrow.

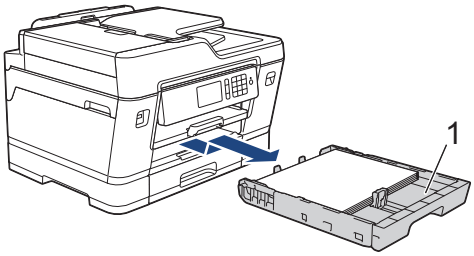

If your LCD error message was repeat paper jam messages, for example `[Repeat Jam Front/Rear]`, lift the paper support (1), and then pull it at an angle completely out of the machine as shown by the arrow.

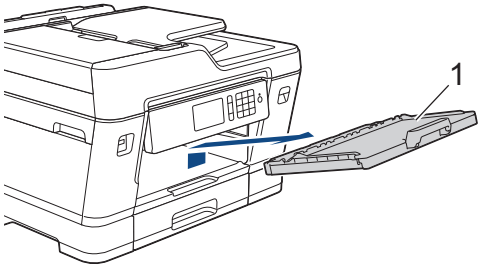

When finished, continue with the next step.

4 Slowly pull out the jammed paper (1).

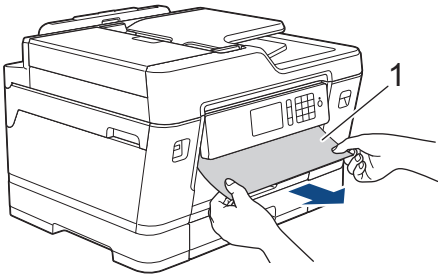

If your LCD error message was repeat paper jam messages, for example `[Repeat Jam Front/Rear]`, do the following:

a. Lift the Jam Clear Flap, and remove the jammed paper.

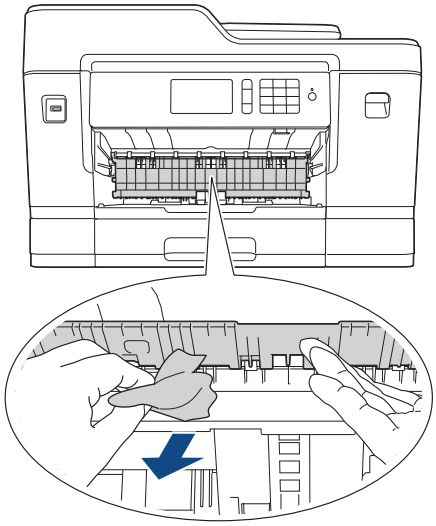

b. Make sure you look carefully inside (1) for any scraps of paper.

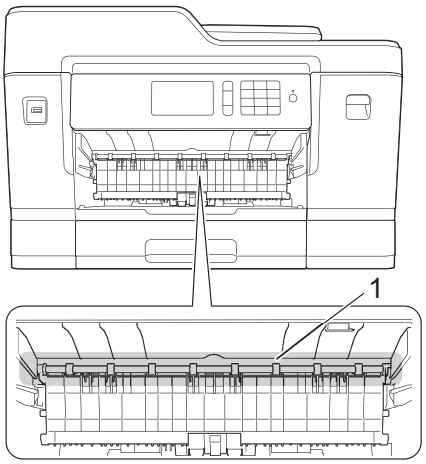

When finished, continue with the next step.

5 Using both hands, use the finger holds on each side of the machine to lift the scanner cover (1) into the open position.

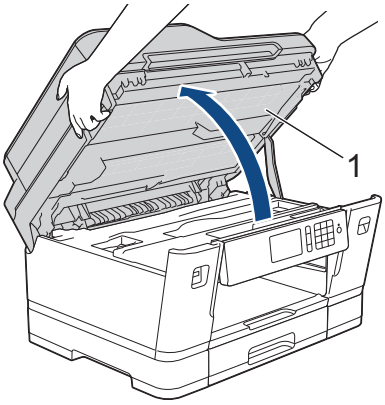

6 Slowly pull the jammed paper (1) out of the machine.

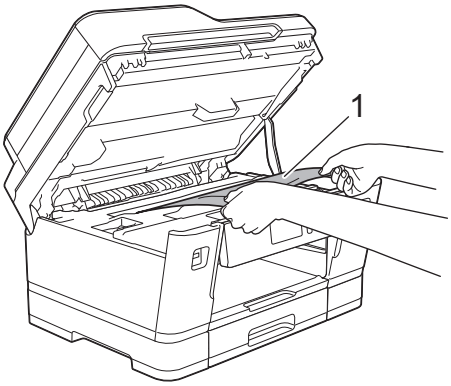

If your LCD error message was repeat paper jam messages, for example `[Repeat Jam Front/Rear]`, move the print head (if necessary) to take out any paper remaining in this area. Make sure pieces of paper are not left in the corners of the machine (1) and (2).

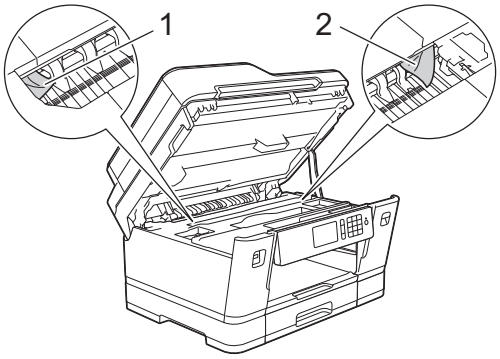

When finished, continue with the next step.

IMPORTANT

- If the print head is in the right corner as shown in the illustration, you cannot move the print head. Close the scanner cover, and then reconnect the power cord. Open the scanner cover again, and then hold down ✕ until the print head moves to the center. Then unplug the machine from the power source and take out the paper.

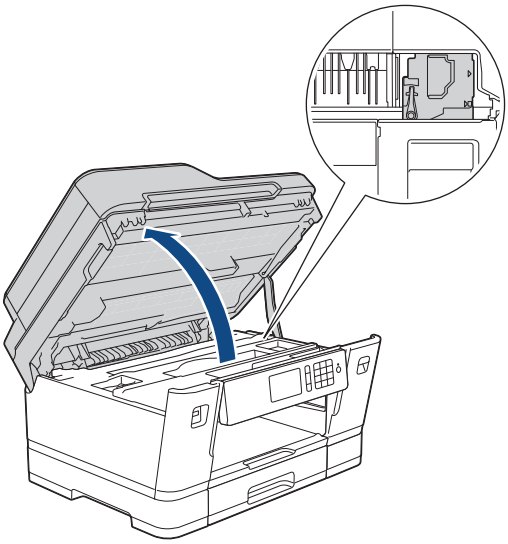

- If the paper is jammed under the print head, unplug the machine from the power source, and then move the print head to take out the paper.
- If ink gets on your skin or clothing, immediately wash it off with soap or detergent.

7 Gently close the scanner cover using the finger holds on each side.

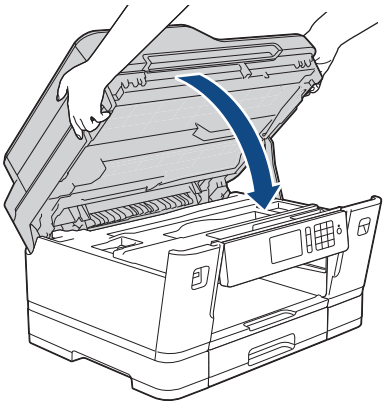

8 If your LCD error message was `[Jam Front/Rear]` or `[Repeat Jam Front/Rear]`, do the following:

a. Open the Jam Clear Cover (1) at the back of the machine.

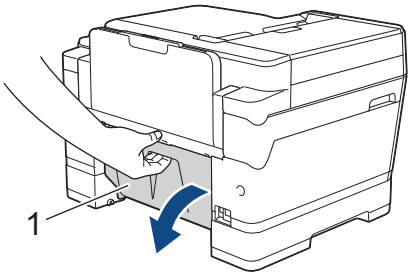

b. Make sure you look carefully inside for jammed paper and slowly pull it out of the machine.

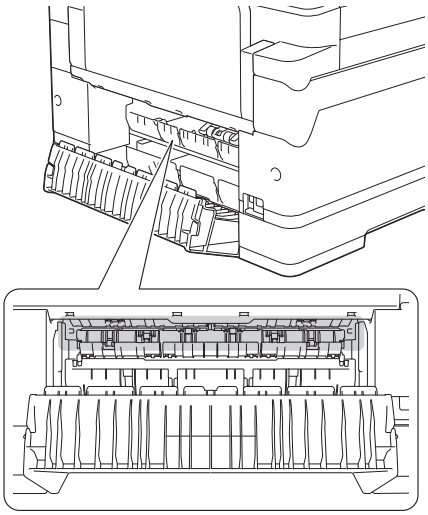

c. Close the Jam Clear Cover. Make sure the cover is closed completely.

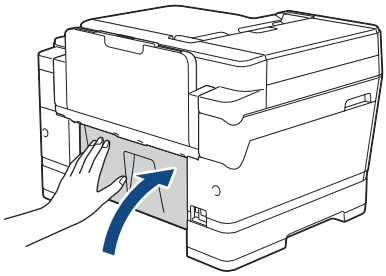

9 If your LCD error message was `[Jam Front/MP Tray]` or `[Repeat Jam Front/MP Tray]`, make sure you look carefully inside the MP tray for jammed paper. Push the release lever (1) toward the back of the machine, and then slowly pull the jammed paper out of the MP tray.

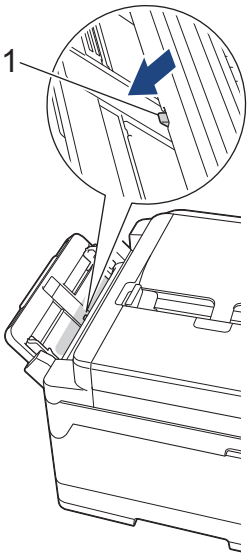

10 If your LCD error message was repeat paper jam messages, for example `[Repeat Jam Front/Rear]`, and you removed the paper support, put it firmly back in the machine. Make sure you fit the paper support into the channels.

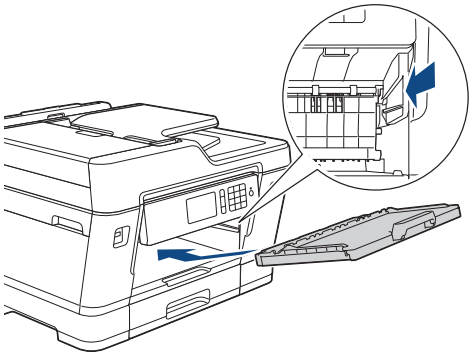

11 Slowly push Tray #1 completely into the machine.

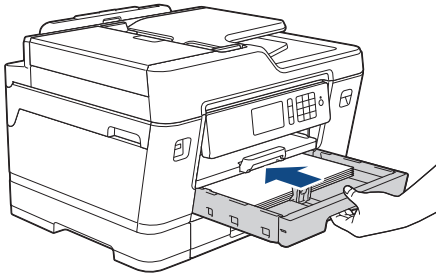

12 Reconnect the power cord.

If there is a repeat paper jam, a small piece of paper may be stuck in the machine.

See *Related Information*: *Remove Paper Scraps*.

Related Information

- Error and Maintenance Messages on page 40
- Remove Paper Scraps on page 63

Paper is Jammed in the Back of the Machine

If the LCD displays the following paper jam messages, follow these steps:

- `[Jam Rear]`, `[Repeat Jam Rear]`
- `[Jam MP Tray]`, `[Repeat Jam MP Tray]`

- [Jam Tray2], [Repeat Jam Tray2]

1 Unplug the machine from the AC power outlet.

2 If the paper is loaded in the MP tray, remove the paper.

3 Pull Tray #1 (1) completely out of the machine as shown by the arrow.

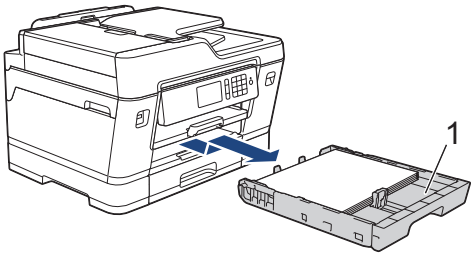

If your LCD error message was [Jam Tray2] or [Repeat Jam Tray2], also pull Tray #2 (2) completely out of the machine as shown by the arrow.

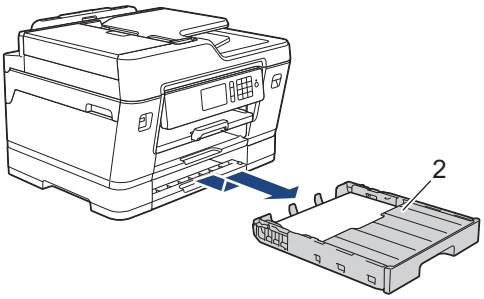

When finished, continue with the next step.

4 If your LCD error message was [Jam Rear], [Repeat Jam Rear], [Jam Tray2] or [Repeat Jam Tray2], do the following:

a. Open the Jam Clear Cover (1) at the back of the machine.

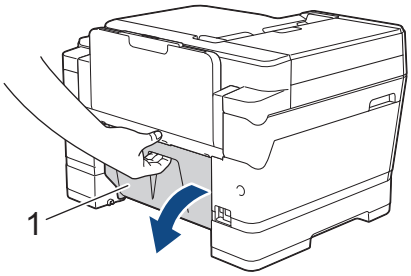

b. Slowly pull the jammed paper out of the machine.

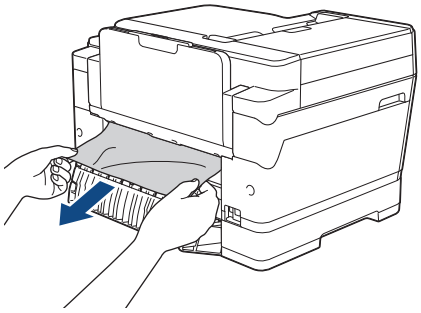

c. Close the Jam Clear Cover. Make sure the cover is closed completely.

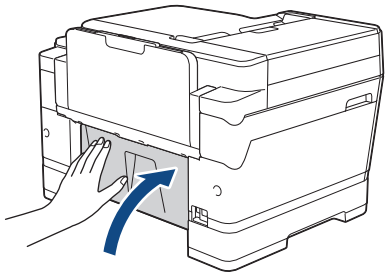

5 If your LCD error message was [Jam MP Tray] or [Repeat Jam MP Tray], push the release lever (1) toward the back of the machine, and

then slowly pull the jammed paper out of the MP tray.

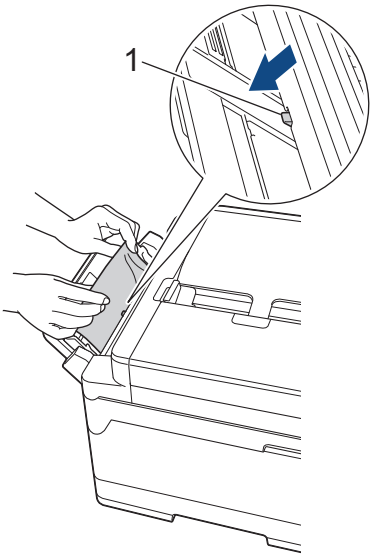

6 Using both hands, use the finger holds on each side of the machine to lift the scanner cover (1) into the open position.

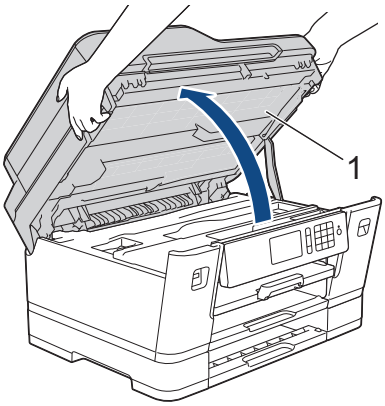

7 Slowly pull the jammed paper (1) out of the machine.

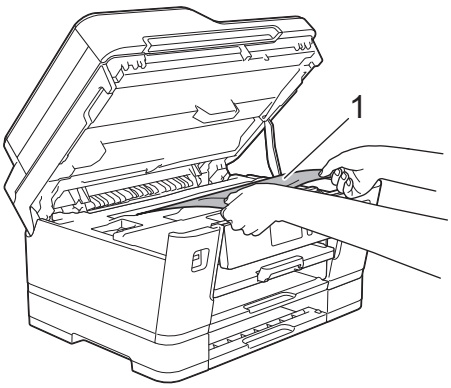

If your LCD error message was repeat paper jam messages, for example `[Repeat Jam Rear]`, move the print head (if necessary) to take out any paper remaining in this area. Make sure pieces of paper are not left in the corners of the machine (1) and (2).

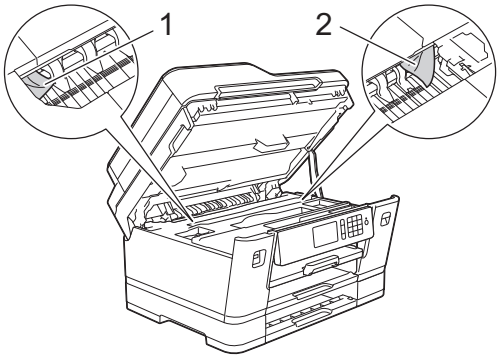

When finished, continue with the next step.

IMPORTANT

- If the print head is in the right corner as shown in the illustration, you cannot move the print head. Close the scanner cover, and then reconnect the power cord. Open the scanner cover again, and then hold down ✕ until the print head moves to the center. Then unplug the machine from the power source and take out the paper.

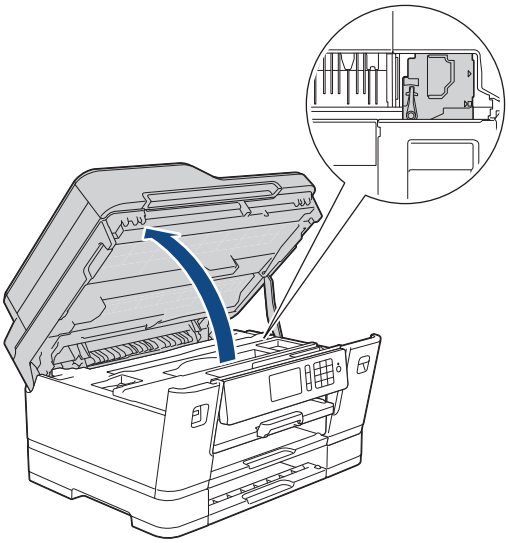

- If the paper is jammed under the print head, unplug the machine from the power source, and then move the print head to take out the paper.
- If ink gets on your skin or clothing, immediately wash it off with soap or detergent.

8 Gently close the scanner cover using the finger holds on each side.

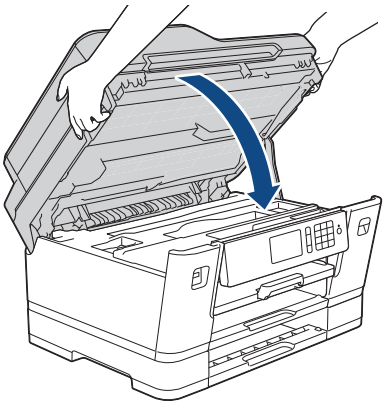

9 Slowly push Tray #1 and Tray #2 (if removed) completely into the machine.

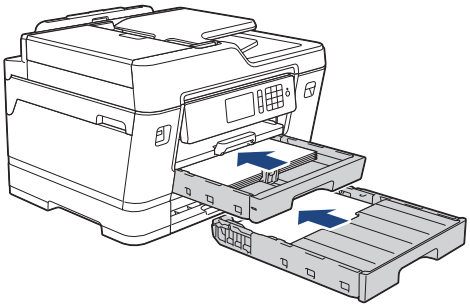

10 Reconnect the power cord.

If there is a repeat paper jam, a small piece of paper may be stuck in the machine.

See *Related Information*: *Remove Paper Scraps*.

Related Information

- Remove Paper Scraps on page 63

Remove Paper Scraps

1 If you repeatedly experience paper jams (3 times or more), the LCD displays a message asking if you want to remove the scraps.

Press `[Yes]` to return to the Home screen.

2 Press [Settings] > [Maintenance] > [Remove Paper Scraps].

3 Follow the instructions on the LCD to locate and remove the jammed paper.

During the procedure, you must insert the Maintenance sheet (included with your machine) into the machine in Landscape orientation through the opening as shown, until you feel it grab the paper. (If you do not have the Maintenance sheet, use one sheet of Letter or A4 size thicker paper, such as glossy paper.)

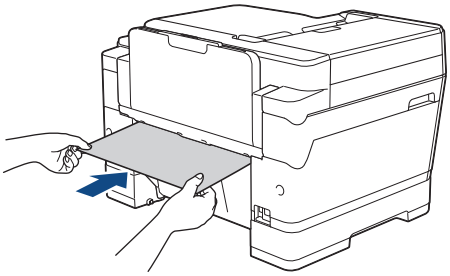

Related Information

- Error and Maintenance Messages on page 40
- Paper is Jammed in the Front of the Machine on page 56
- Paper is Jammed in the Back of the Machine on page 60

C Appendix

Enter Text on Your Brother Machine

- The characters that are available may differ depending on your country.
- The keyboard layout may differ depending on the function you are setting.

When you need to enter text on your Brother machine, a keyboard will appear on the Touchscreen.

- Press A 1 @ to cycle between letters, numbers and special characters.
- Press ⇧aA to cycle between lowercase and uppercase letters.
- To move the cursor to the left or right, press ◀ or ▶.

Inserting spaces

- To enter a space, press [Space]. Or, you can press ▶ to move the cursor.

Making corrections

- If you entered an incorrect character and want to change it, press ◀ or ▶ to highlight the incorrect character. Press ⌫, and then enter the correct character.
- To insert a character, press ◀ or ▶ to move the cursor to the correct place, and then enter the character.
- Press ⌫ for each character you want to erase, or press and hold ⌫ to erase all the characters.

Related Information

- Set Your Station ID on page 27

Check the Machine Information

Follow these instructions to check your Brother machine's serial number, firmware version and firmware update.

1. Press [Settings] > [All Settings] > [Machine Info.].
2. Press one of the following options:
   - [Serial No.]
     Check your machine's serial number.
   - [Firmware Version]
     Check your machine's firmware version.
   - [Firmware Update]
     Update your machine to the latest firmware.
   - [Firmware Auto Check]
     View firmware information on the Home screen.
3. Press ⌂.

Reset Your Brother Machine

1. Press [Settings] > [All Settings] > [Initial Setup] > [Reset].

2. Press the reset option you want to use.

3. Press [OK] for two seconds to reboot the machine.

Reset Functions Overview

The following reset functions are available:

1. [Machine Reset]

   You can reset all the machine's settings that you have changed, such as Date and Time and Ring Delay.

   The Address Book, Fax Reports, and Call History will remain.

2. [Network]

   Reset the print server back to its default factory settings (includes Password and IP Address information).

3. [Address Book & Fax]

   Address Book & Fax resets the following settings:

   - Address Book

     (Address Book and Setup Groups)

   - Programmed fax jobs in the memory

     (Delayed Fax and Delayed Batch Transmission)

   - Station ID

     (Name and Number)

   - Remote Fax Options

     (Fax Forwarding and Paging (USA and Canada only))

   - Report

     (Transmission Verification Report, Address Book and Fax Journal)

   - History

     (Caller ID history and Outgoing Call)

   - Faxes in memory

4. [All Settings]

   Use the Settings Reset function to reset all machine's settings to the settings originally set at the factory.

   Brother strongly recommends you perform this operation when you dispose of the machine.

Unplug the interface cable before you choose [Network] or [All Settings].

Supply Specifications

Ink	The machine uses individual Black, Yellow, Cyan and Magenta ink cartridges that are separate from the print head assembly.
Service Life of Ink Cartridge	The first time you install the ink cartridges, the machine will use extra ink to fill the ink delivery tubes. This is a one-time process that enables high-quality printing. Replacement ink cartridges will print the number of pages specified later in this table. Starter cartridge yield is approximately 65% of the yield of the LC3017 replacement cartridges.
Replacement Supplies	<Super High Yield Black> LC3019BK <Super High Yield Yellow> LC3019Y <Super High Yield Cyan> LC3019C <Super High Yield Magenta> LC3019M Black - Approximately 3000 pages [1] Yellow, Cyan and Magenta - Approximately 1500 pages [1]
	<High Yield Black> LC3017BK <High Yield Yellow> LC3017Y <High Yield Cyan> LC3017C <High Yield Magenta> LC3017M Black, Yellow, Cyan and Magenta - Approximately 550 pages [1]
	For more information about replacement supplies, visit us at www.brother.com/pageyield
What is Innobella?	Innobella is a range of genuine supplies offered by Brother. The name "Innobella" derives from the words "Innovation" and "Bella" (meaning "Beautiful" in Italian) and is a representation of the "innovative" technology providing you with "beautiful" and "long lasting" print results. When you print photo images, Brother recommends Innobella glossy photo paper (BP71 series) for high quality. Brilliant prints are made easier with Innobella Ink and paper.

[1] Approx. cartridge yield is declared in accordance with ISO/IEC 24711

BROTHER CREATIVECENTER

If using Windows®, double-click the **Brother Creative Center** icon on your desktop to access our **FREE** website designed as a resource to help you easily create and print customized materials for business and home use with photos, text and creativity.

Mac users can access Brother CreativeCenter at this web address: www.brother.com/creativecenter

Related Information

- Error and Maintenance Messages on page 40

D Index

A

Accessories and Supplies..... ii
Address Book
  changing and deleting..... 31
  setting up.....31
ADF (automatic document feeder).....19
Automatic
  fax receive.....28

B

Brother
  Brother numbers.....i
  Customer Service.....i
  FAQs (Frequently Asked Questions)..i
  product support..... i
  service centers..... i

C

Cleaning
  scanner..... 36
Control Panel Overview..... 1
Copy..... 24

D

Distinctive Ring..... 29, 32
Document
  how to load..... 19, 20

E

Entering Text.....65
Error messages..... 40

F

Fax
  F/T ring time..... 30
  ring delay.....30
  station ID.....27
  telephone line compatibility..... 27
Fax receive..... 28
Fax, from computer.....34

J

Jams..... 55
  document..... 55
  paper..... 56

M

Manual
  receive.....28

N

NFC (Near Field Communication)... iv, 40

P

Paper
  check paper setting..... 18
  how to load 8
Print..... 22
  alignment check..... 38
  quality check..... 36

R

Receive Mode..... 28, 29

S

Scan.....25
Supplies..... 67

T

TAD (Telephone Answering Device),
external..... 28, 32
Transferring your faxes or Fax Journal
report..... 45
Troubleshooting
  document and paper jams 55
  error and maintenance messages ..40
  fax and telephone problems 52

print or scan problems 48

V

Voice Mail..... 32
VoIP systems..... 27, 32

W

Warranty is in the box
Notice of disclaimer iii
Wireless LAN report.....47

Brother International Corporation
200 Crossing Boulevard
P.O. Box 6911
Bridgewater, NJ 08807-0911 USA

Brother International Corporation (Canada) Ltd.
1 rue Hôtel de Ville,
Dollard-des-Ormeaux, QC, Canada H9B 3H6

Visit us on the World Wide Web
www.brother.com

This machine is approved for use in the country of purchase only. Local Brother companies or their dealers will support only machines purchased in their own countries.

Made from 100% recycled paper
(excludes cover)

Brother Earth
www.brotherearth.com

D00E0J001-00
USA/CAN
Version 0