OSP HOME FURNISHINGS™
trends to *Live by*

November, 2019

ARE25

AREA 51 BATTLESTATION GAME DESK

Assembly Instructions - Important:

Carefully unpack and identify each component before attempting to assemble. Refer to parts list. Please take care when assembling the unit and always set the parts on a clean, soft surface. If you require any assistance with assembly, parts or information on other products, please visit our website: www.officestar.net or call or write us.

1. Do not use this product unless all screws and bolts are securely tightened.
2. Check that all screws and bolts are tight every three months or as needed.
3. Dispose of packing material properly. Do not use plastic cover as head covering. It may cause suffocation.
4. Do not use this product as a stepladder.
5. Use this product for its intended purpose only.
6. FOR INDOOR RESIDENTIAL USE ONLY.

LIMITED WARRANTY

OSP Home Furnishings™ warrants to the original purchaser that this product will be free from defects in material and workmanship as described below. OSP Home Furnishings™ will repair or replace, at its option, without charge to the original purchaser only, defective products or parts for one (1) year from the date of purchase. Replacement parts can only be supplied if parts are available. Items out of production may be unavailable. This warranty shall be effective for the applicable time period beginning from the date of purchase as shown on your original sales receipt. This warranty is your sole remedy for product defects and excludes defects due to or arising in connection with product abuse or misuse, use modification of, or attachments to the product, and products or parts not used, maintained, or installed in accordance with the company's installation, maintenance and/or applicable guidelines. There are no other warranties, express or implied, other than those specifically described, including without limitation any implied warranty of merchantability or of fitness for a particular purpose. OSP Home Furnishings™ will not be responsible for incidental or consequential damages. Some states do not allow the exclusion or limitation of incidental or consequential damages, so the above limitations or exclusions may not apply to you. This warranty gives you specific legal rights and you may also have other rights which may vary from state to state. Our quality standards are among the highest in the industry. Sometimes, no matter how hard we try, there are times when parts are damaged or missing. Our Parts Department will do everything possible to promptly remedy the problem. Contact us via e-mail parts@officestar.net, by Fax 1-909-930-5629, or toll free parts number 1-800-950-7262, Monday through Friday 8:00 a.m. - 5:00 p.m. Pacific Time. To make a warranty claim, contact Parts Department. Provide model number, proof of purchase, description of the problem and obtain return authorization. At its option OSP Home Furnishings™ will: (a) Supply compatible components of current manufacture. (b) Repair the customer's component. The customer must prepay freight on any components returned to the factory. Return freight on components still in warranty will be paid by OSP Home Furnishings™.

PARTS

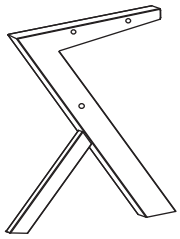

(A) Leg (2 PCS)

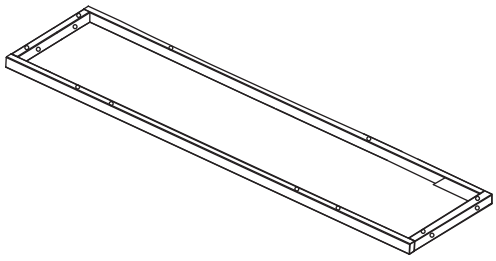

(B) Frame (1 PC)

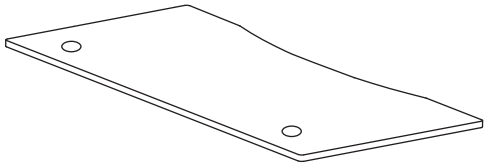

(C) Top (1 PC)

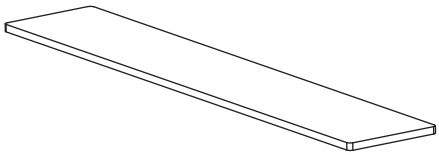

(D) Shelf (1 PC)

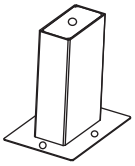

(E) Shelf Support (2 PCS)

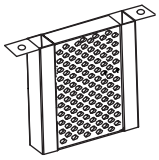

(F) Shelf Support (1 PC)

(G) Leg Support (2 PCS)

(H) LED Light Tube (1 PC)

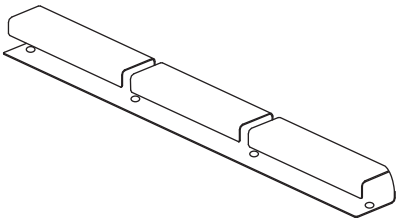

(I) Bracket (1 PC)

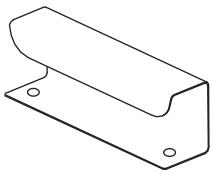

(J) Bracket (1 PC)

PARTS

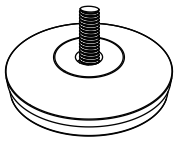

(K) Foot (4 PCS)

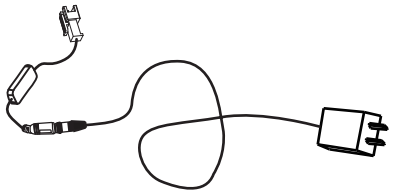

(L) LED Power Adapter (1 PC)

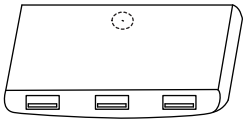

(M) USB Charger (1 PC)

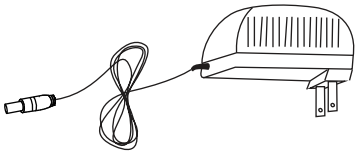

(N) USB Power Adapter (1 PC)

(O) Bracket (6 PCS)

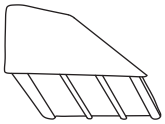

(P) Front Foot Support (2 PCS)

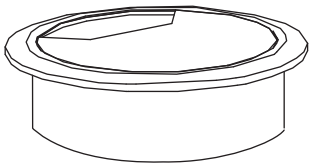

(Q) Plastic Cap (2 PCS)

HARDWARE LIST

NO	DRAWING	DESCRIPTION	SIZE	QUANTITY
1		Screw	M3 x 10	12 PCS
2		Screw	M4 x 14	10 PCS + 1 COLOR
3		Bolt	M6 x 10	10 PCS
4		Bolt	M6 x 16	2 PCS
5		Bolt	M6 x 30	2 PCS
6		Bolt	M6 x 40	8 PCS
7		Bolt	M6 x 50	6 PCS
8		Nut	M6	2 PCS
9		Connecting Cap Nut	N/A	4 PCS
10		Screwdriver	N/A	1 PC
11		Allen Wrench	M5	2 PCS

STEP 1

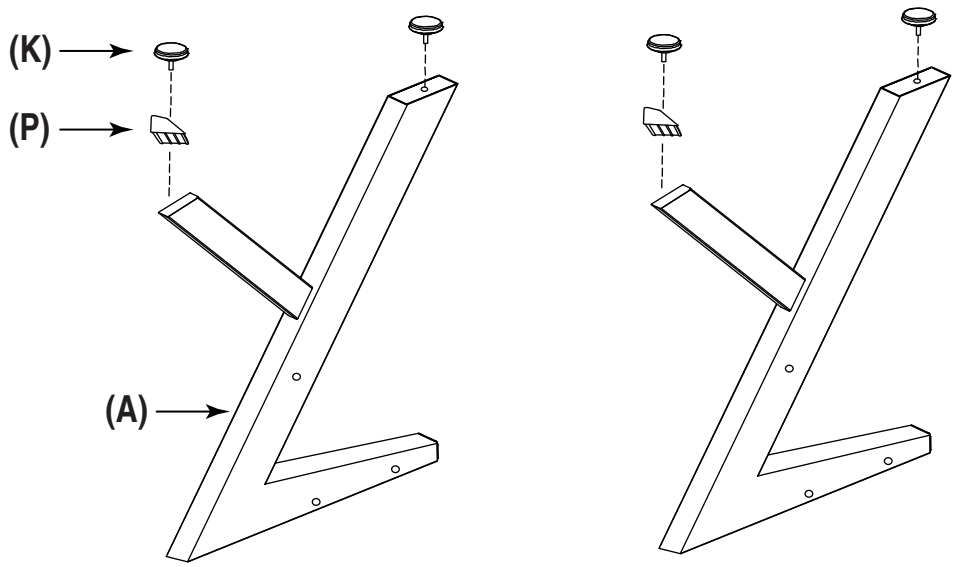

STEP 2

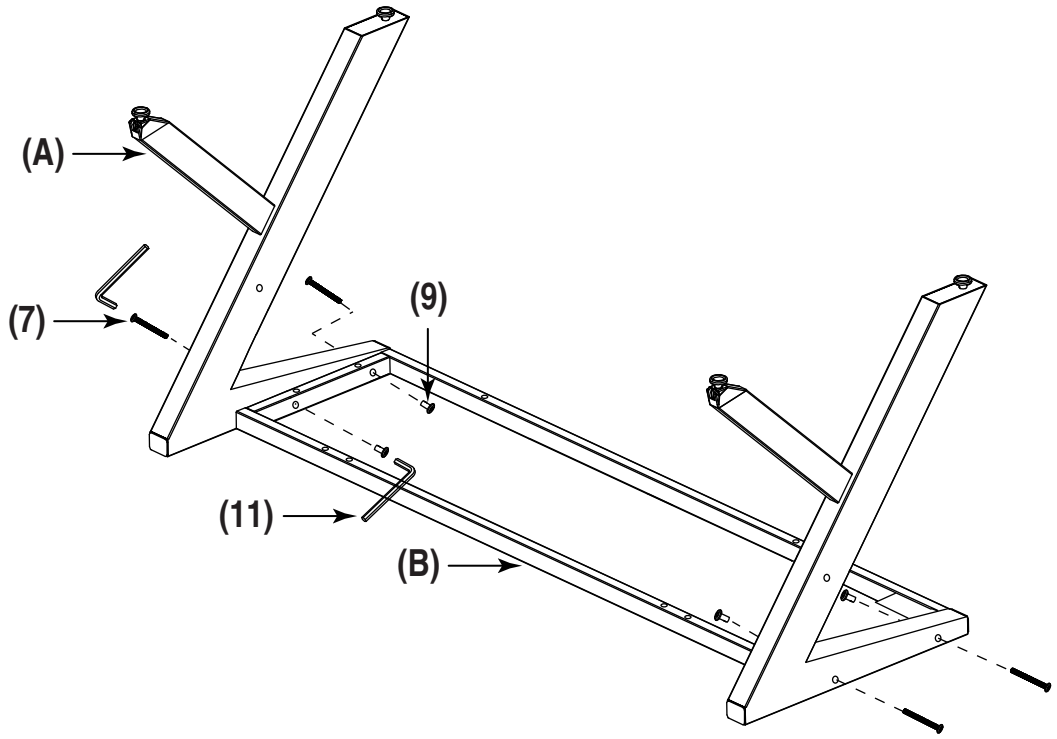

DO NOT FULLY TIGHTEN BOLTS AND NUTS.

STEP 3

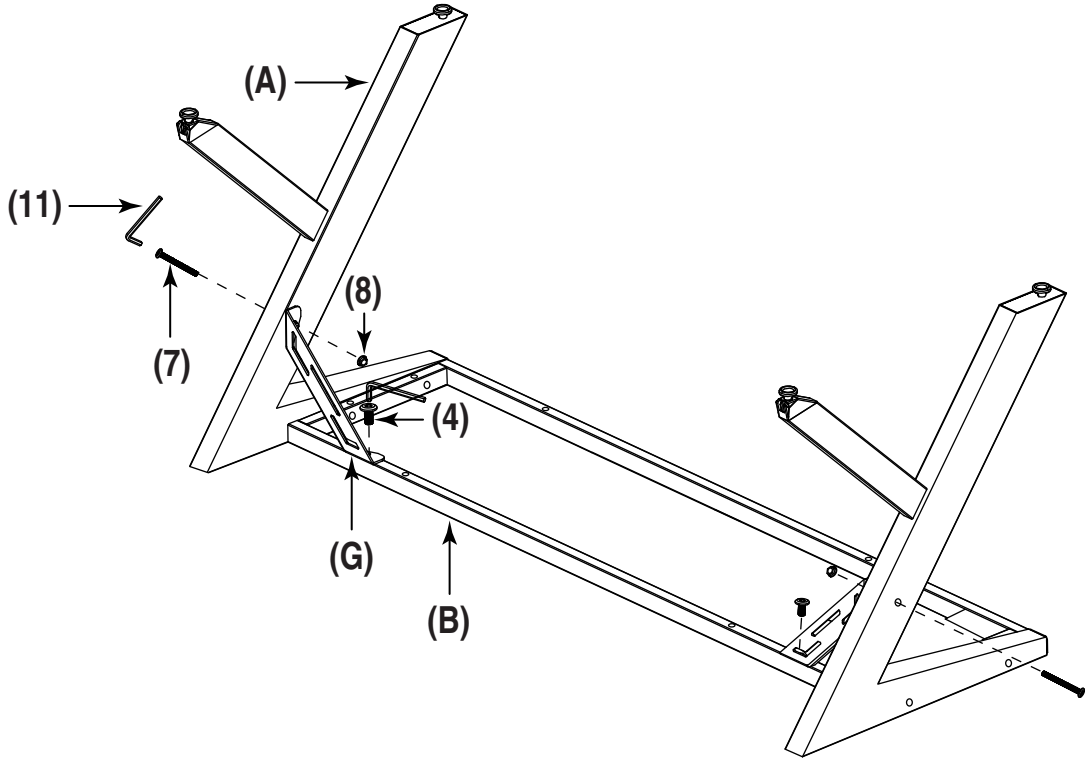

FULLY TIGHTEN ALL BOLTS & NUTS.

STEP 4

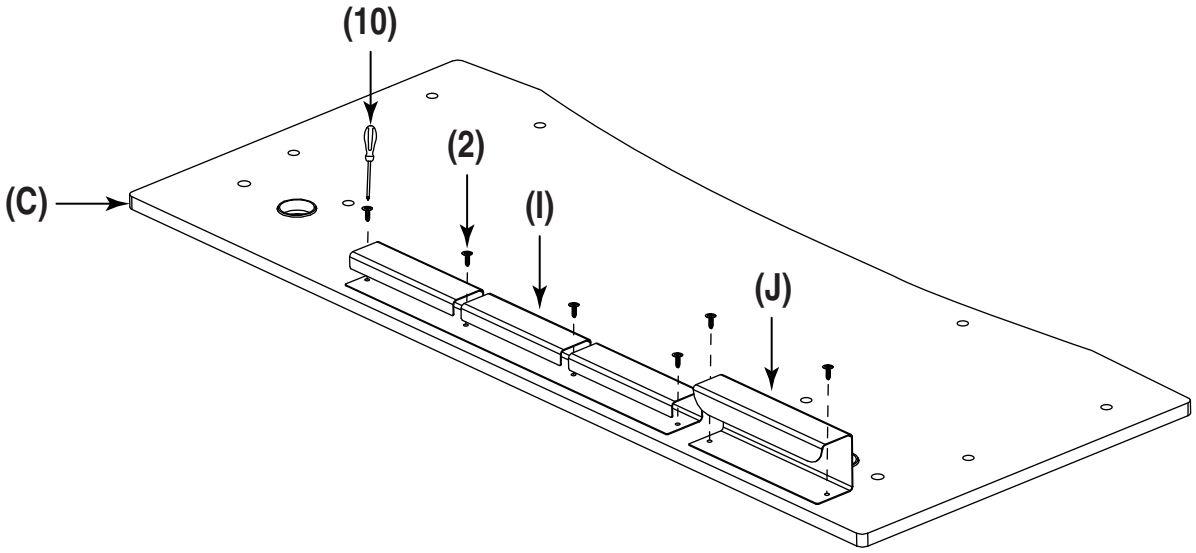

FULLY TIGHTEN ALL SCREWS (2).

STEP 5

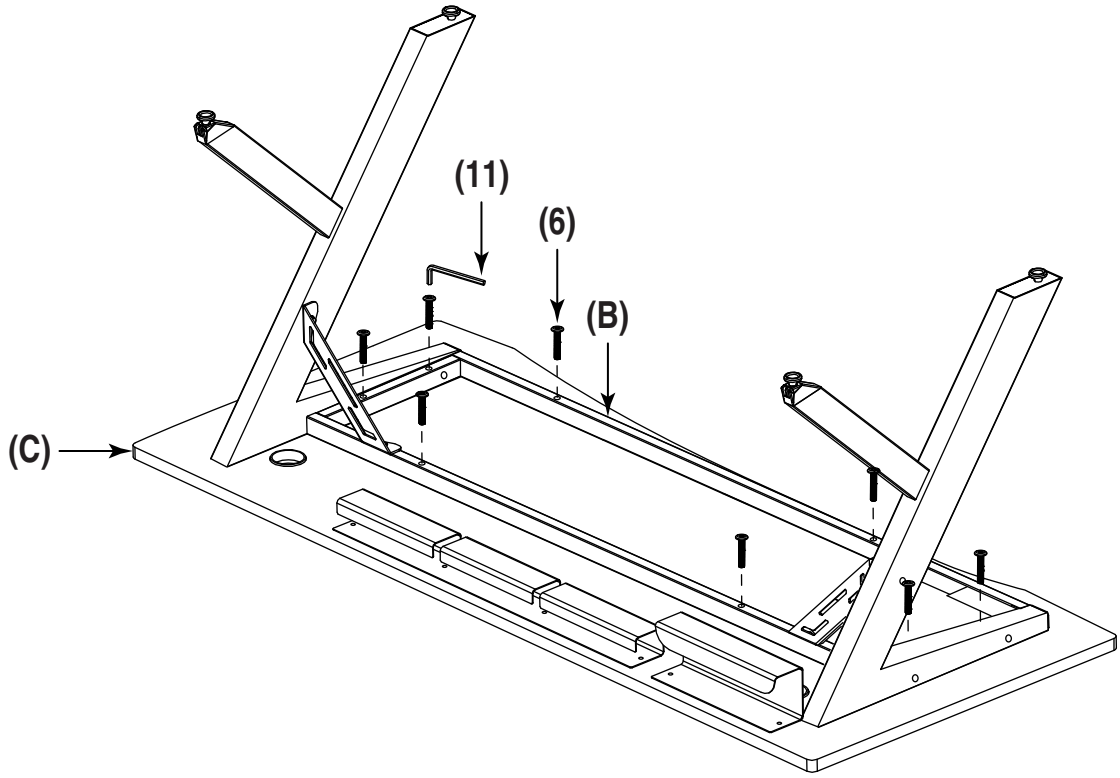

FULLY TIGHTEN ALL BOLTS (6).

STEP 6

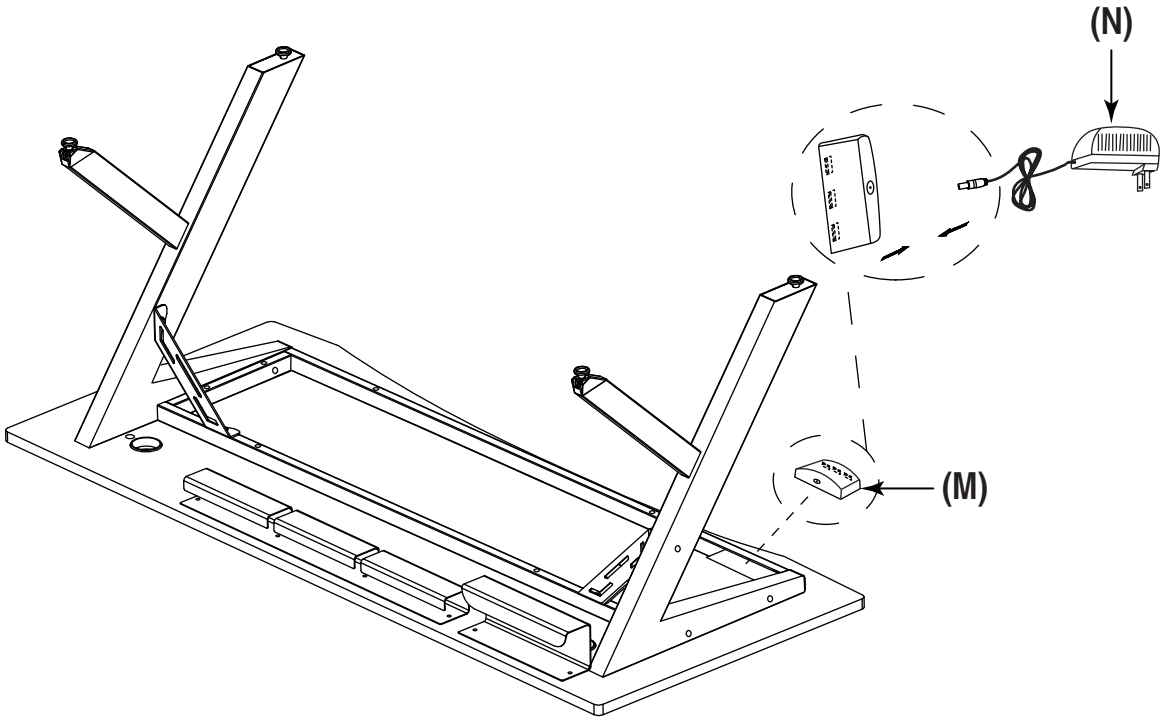

STEP 7

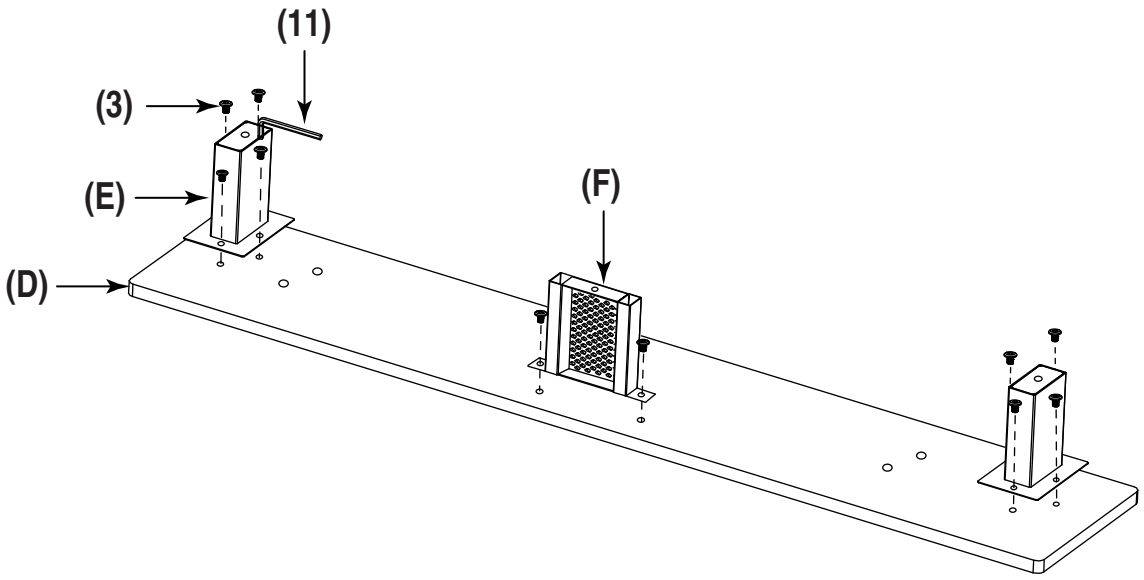

DO NOT FULLY TIGHTEN BOLTS.

STEP 8

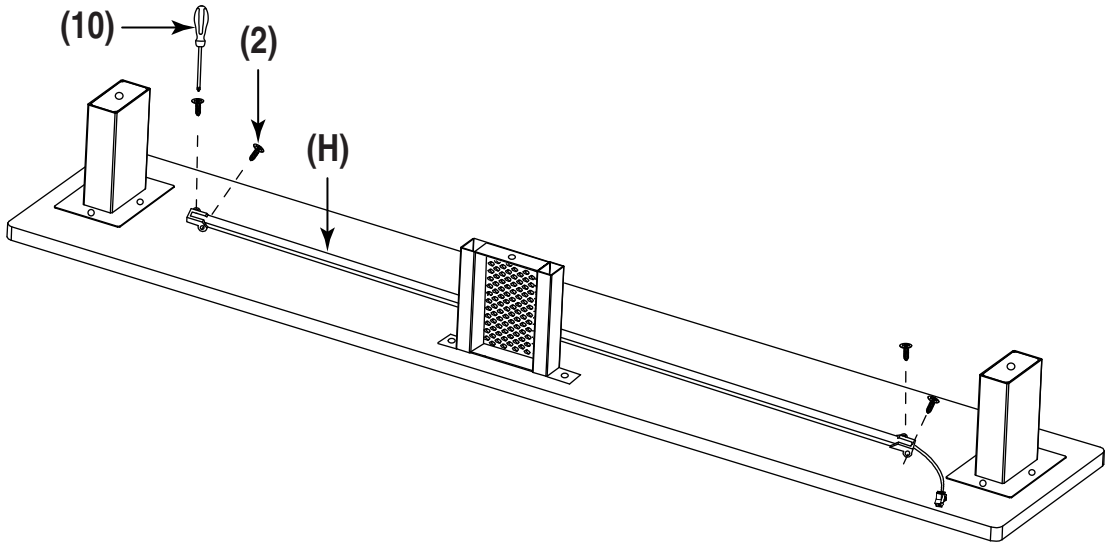

FULLY TIGHTEN SCREWS (2).

STEP 9

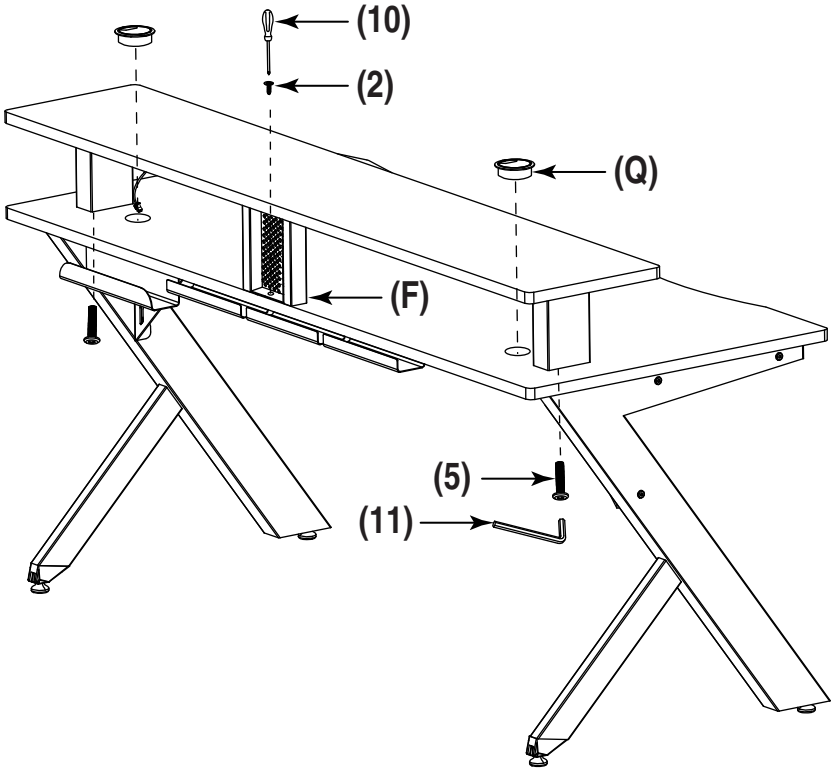

NOTE: SECURE SHELF SUPPORT (F) USING MATCHING COLOR SCREW (2).
FULLY TIGHTEN ALL BOLTS. FULLY TIGHTEN SCREW (2).

STEP 10

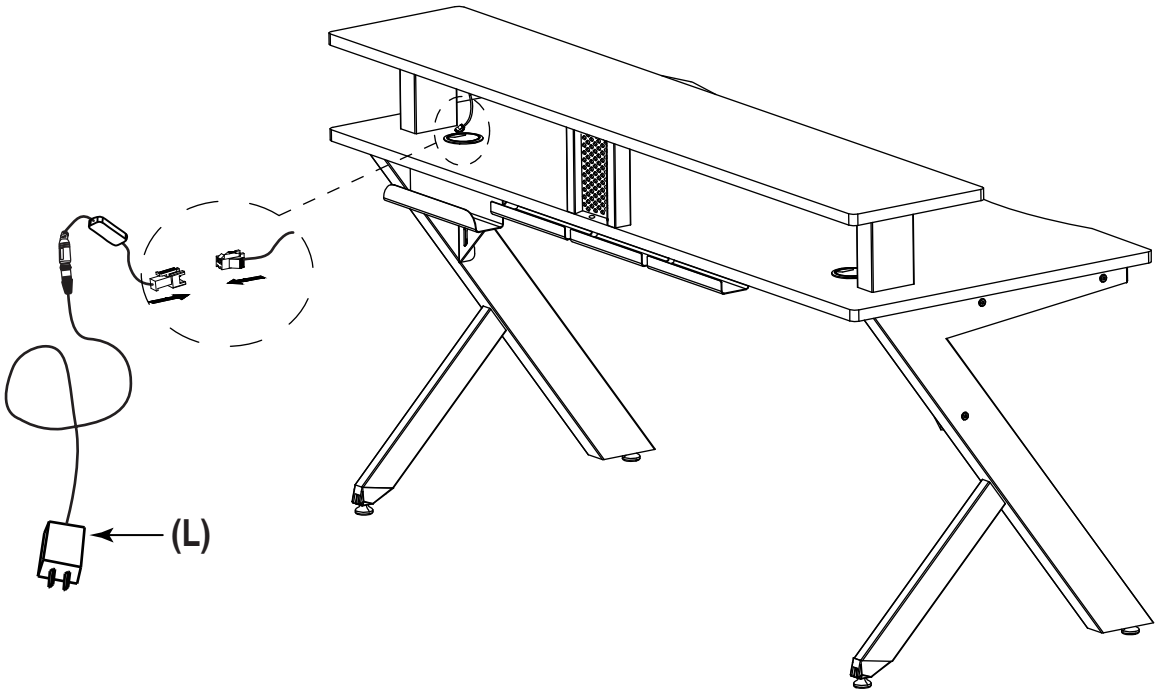

STEP 11

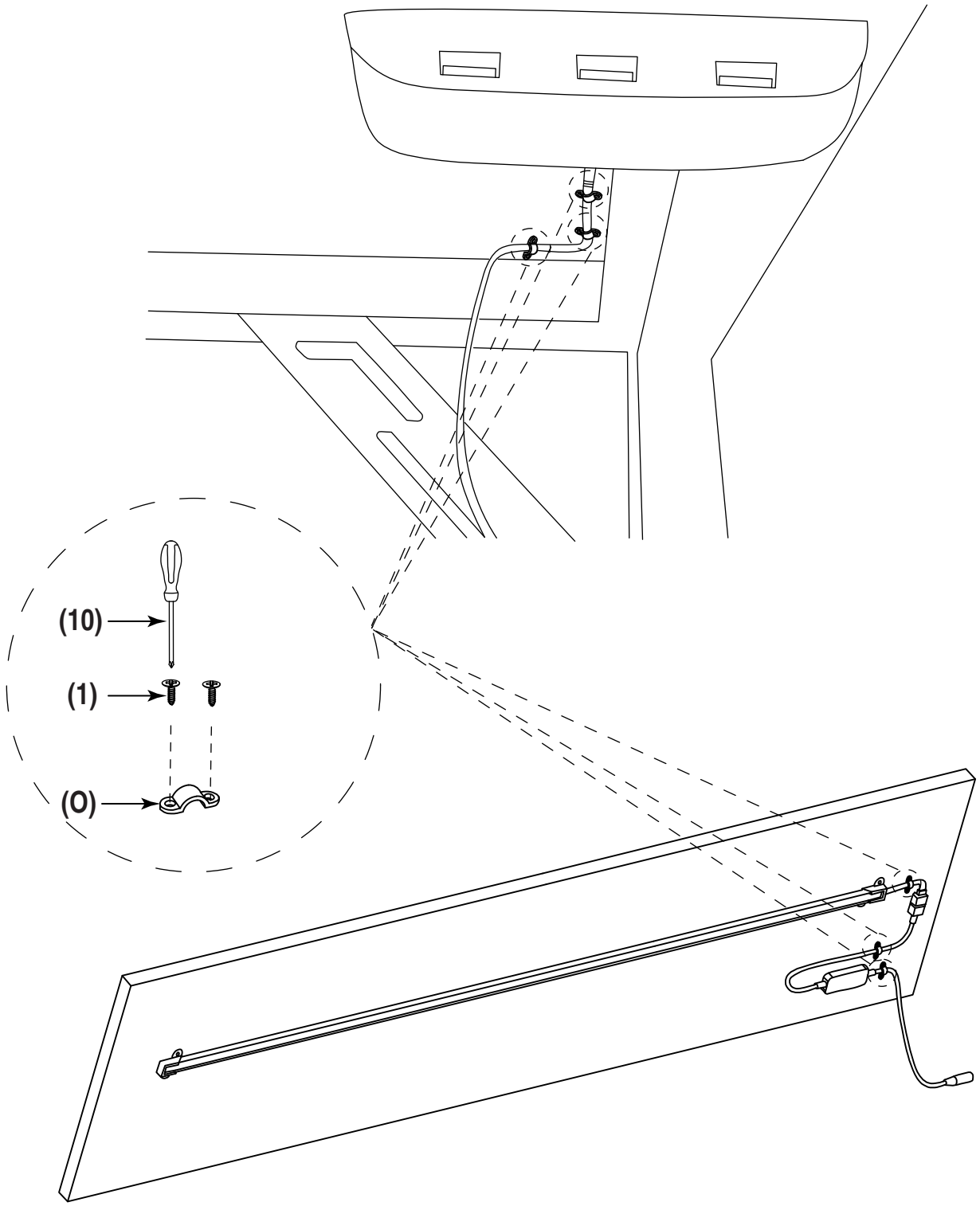

FULLY TIGHTEN ALL SCREWS.