www.URBANARMORGEAR.com

UAG®

URBAN ARMOR GEAR

DESIGNED FOR

Samsung Galaxy S8

SERIES

PLASMA

THREE LAYER PROTECTION

FEATURES

COLORS

Ice (Transparent) | Ash (Grey Transparent) | Cobalt (Blue Transparent) | Citron (Yellow Transparent)

DROP TESTED ★ APPROVED ★ MILITARY STANDARD MIL STD 810G-516.6

SKU DESCRIPTION	COLOR	UNIT UPC NUMBER
GLXS8-L-IC	Ice (Transparent)	8 50507 00795 4
GLXS8-L-AS	Ash (Grey Transparent)	8 50507 00796 1
GLXS8-L-CB	Cobalt (Blue Transparent)	8 50507 00797 8
GLXS8-L-CI	Citron (Yellow Transparent)	8 50507 00798 5

CASE SPECIFICATIONS

Weight	Length	Width	Depth
1.60 oz / 0.04 kg	5.80 in / 14.73 cm	3.00 in / 7.62 cm	0.47 in / 1.19 cm

RETAIL PACKAGED PRODUCT SPECIFICATIONS

Weight	Length	Width	Depth
3.20 oz / 0.09 kg	7.60 in / 19.30 cm	4.30 in / 10.92 cm	0.80 in / 2.03 cm

THREE LAYER PROTECTION

1 ARMOR SHELL
2 SHOCK CUSHIONS
3 IMPACT RESISTANT RUBBER

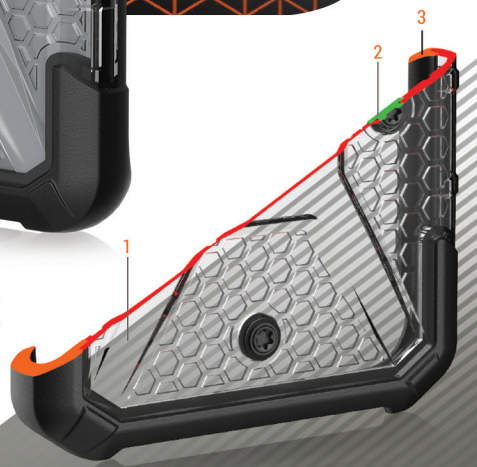

For more sales information: SALES@URBANARMORGEAR.COM

©2017 Urban Armor Gear, All Rights Reserved. Samsung® and Galaxy S8® are registered trademarks of Samsung. Urban Armor Gear® and the UAG® Logo are registered trademarks of Urban Armor Gear, LLC.