OneSpace™

OneSpace is a Trademark of Comfort Products, Inc.

ASSEMBLY INSTRUCTIONS

MODEL 50-JN23DSK

SUPPLIER CODE: JNFF

RUSTIC INDUSTRIAL LOCKER DESK

CUSTOMER SERVICE

For fastest service on claims, requests for replacement parts, or questions, please visit our website at:

www.comfortproducts.net/support

e-mail: customerservice@comfortproducts.net

Keep your sales receipt as documentation of your ownership.

PARTS LIST Overview

Please look for part indicator on the side of the part. It is either stamped or on a labeled sticker.

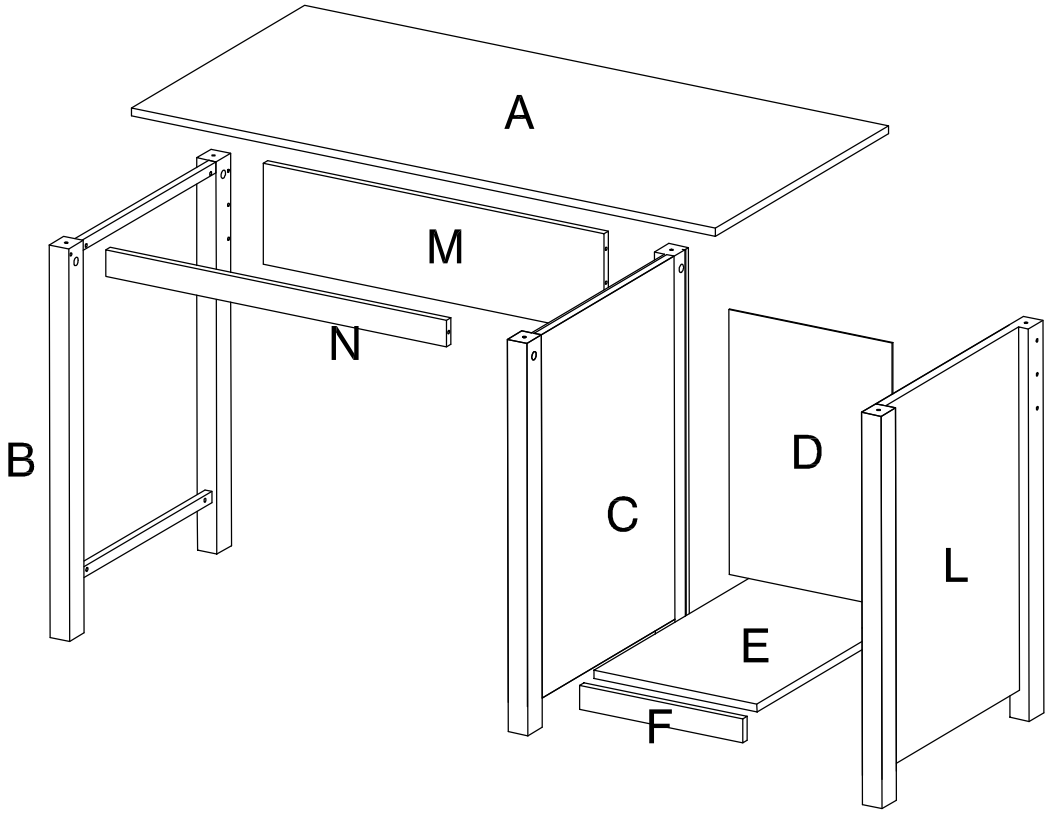

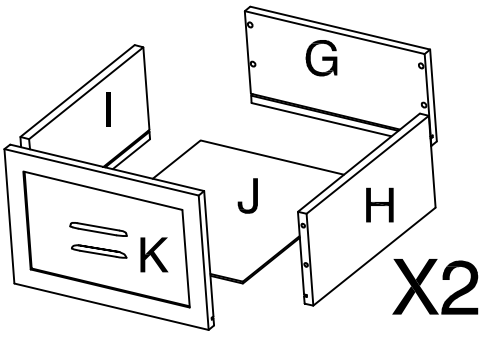

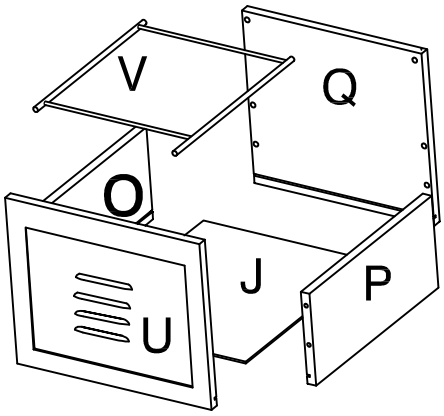

PARTS LIST

Please look for part indicator on the side of the part. It is either stamped or on a labled sticker.

PART	DESCRIPTION	STOCK#	QTY
A	Desktop	51-JN23DSKA	1
B	Left Legs	51-JN23DSKB	1
C	Left Cabinet Wall	51-JN23DSKC	2
D	Cabinet Back	51-JN23DSKD	1
E	Cabinet Floor	51-JN23DSKE	1
F	Cabinet Floor Trim	51-JN23DSKF	1
G	Small Drawer Back Panel	51-JN23DSKG	2
H	Small Drawer Right Panel	51-JN23DSKH	2
I	Small Drawer Left Panel	51-JN23DSKI	2
J	Drawer Bottom	51-JN23DSKJ	3
K	Small Drawer Front	51-JN23DSKK	2
L	Right Cabinet Wall	51-JN23DSKL	2
M	Desktop Support Board	51-JN23DSKM	1
N	Desktop Front Trim	51-JN23DSKN	2
O	File Drawer Left Panel	51-JN23DSKO	3
P	File Drawer Right Panel	51-JN23DSKP	2
Q	File Drawer Back Panel	51-JN23DSKQ	2
U	File Drawer Front	51-JN23DSKU	1
V	File Rod Assembly	51-JN23DSKV	1

HARDWARE KIT

STOCK # 51-JN23DSKHA

① Minifix Bolt x40	② Minifix Lock x40	③ 4x18mm Screw x6
④ 4x35mm Screw x12	⑤ 4x12mm Screw x28	⑥ Wood Peg x12
⑦ Drawer Handle x3	⑧ Drawer Slides 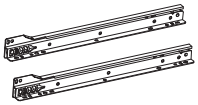 3SET	⑨ Drawer Slides x4

ASSEMBLY

1

You will need:

U, **P**, **O**, **Q**, **J**, **V**

① x4
② x4
③ x2
④ x4
⑨ x1

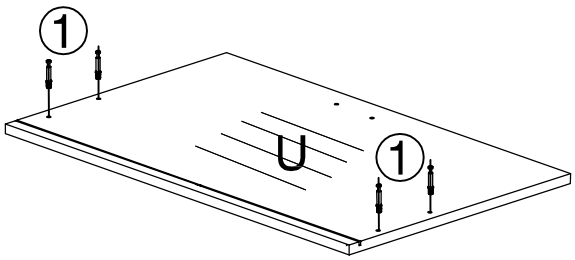

1

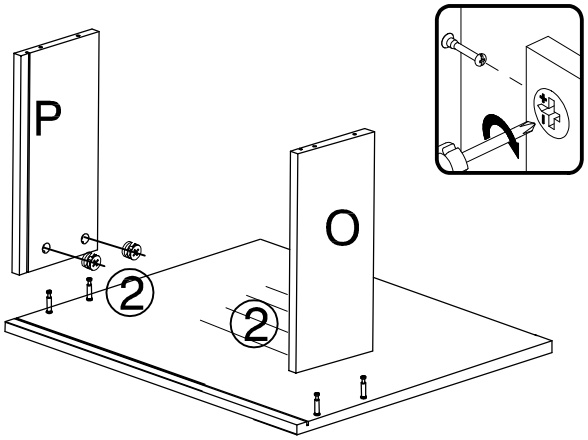

2

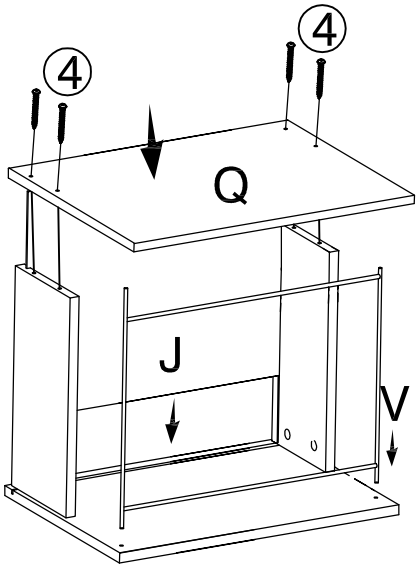

3

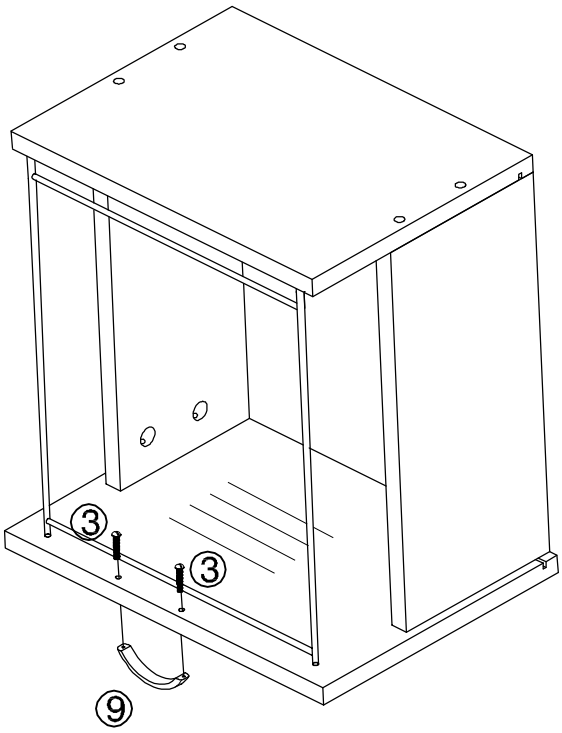

4

2

You will need:

K, I, H, G, J

① x4
② x4
③ x2
④ x4
⑨ x1

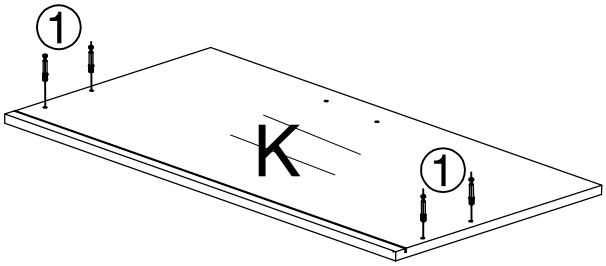

1

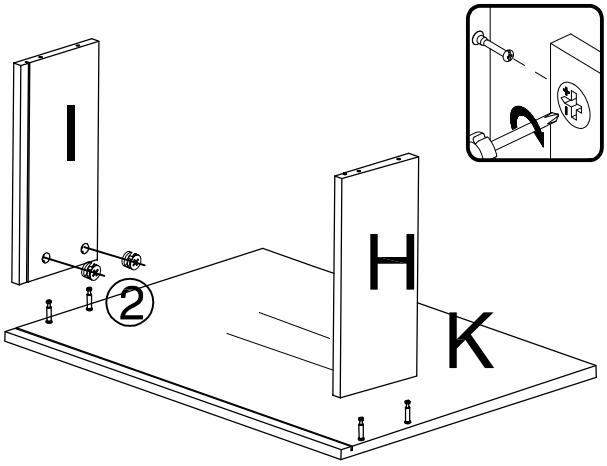

2

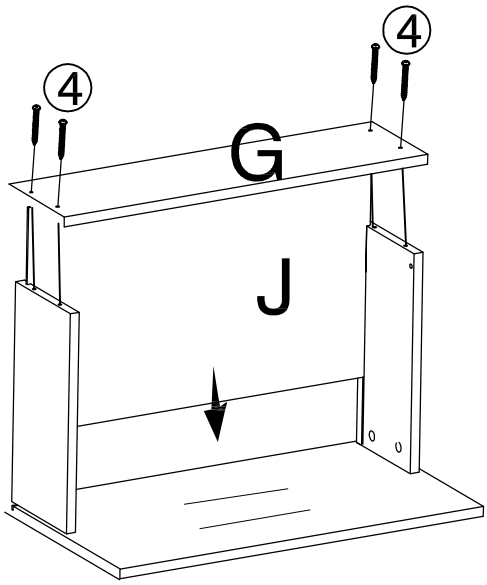

3

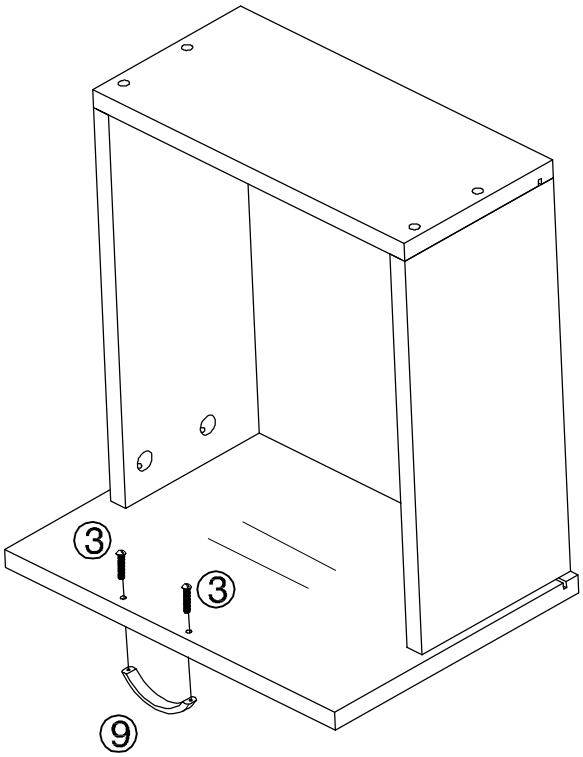

4

Repeat these steps for the 2nd drawer

3 Mount inner drawer slides (on all three drawers).

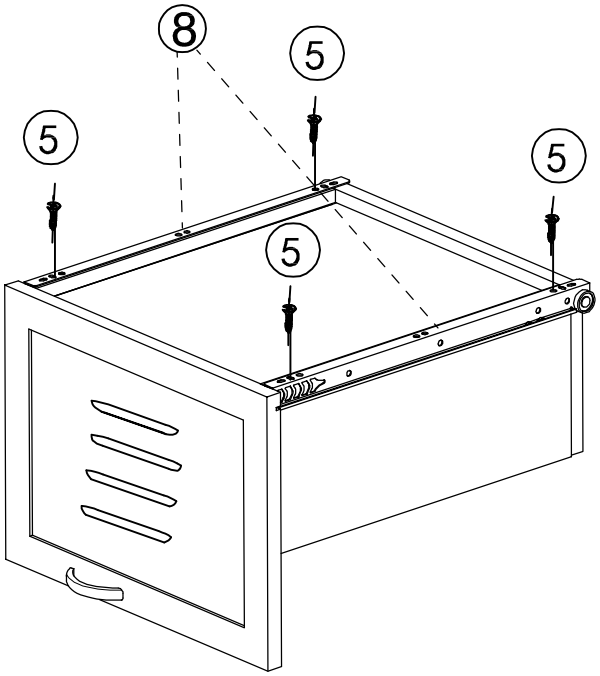

4 Mount outter drawer slides.

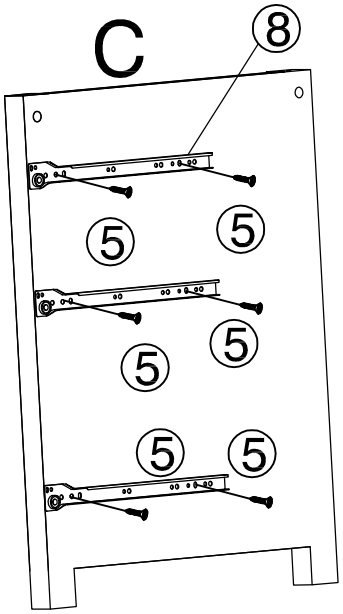

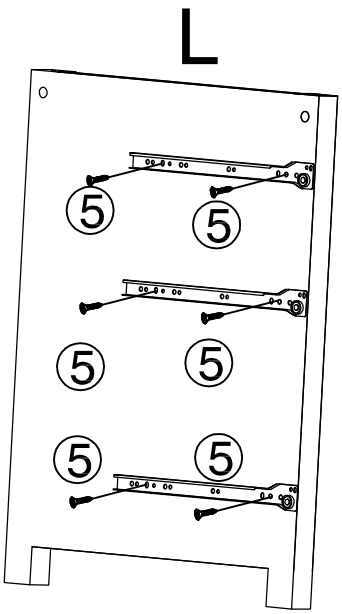

5 Cabinet Assembly

You will need:

F, E, C, L, D

① x6
② x4
⑥ x4

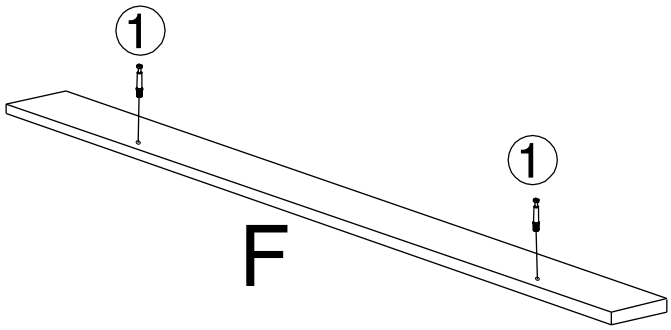

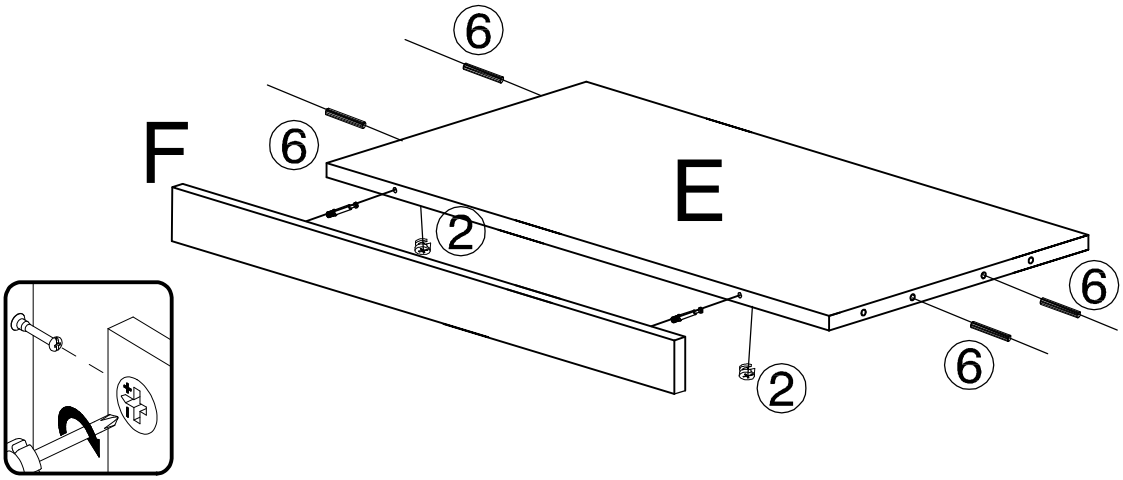

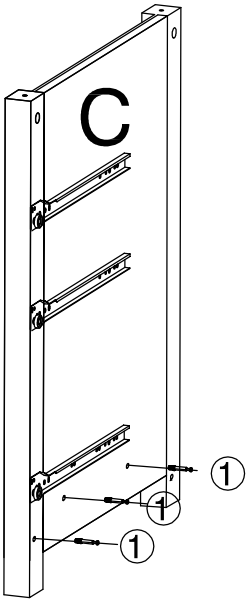

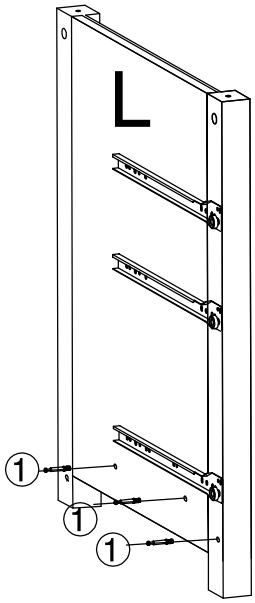

5 (continued...)

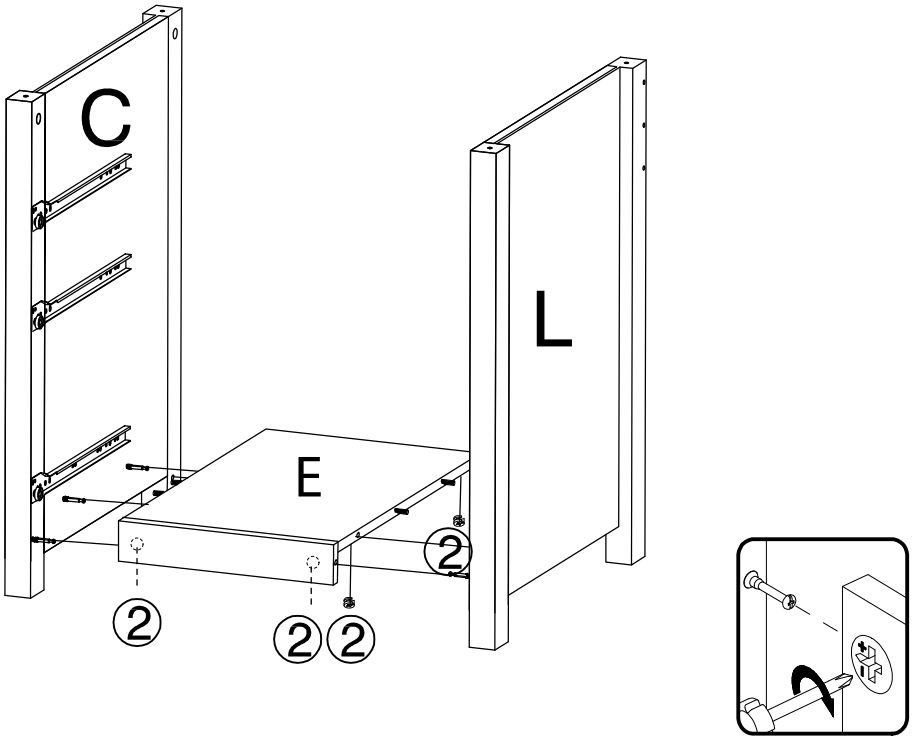

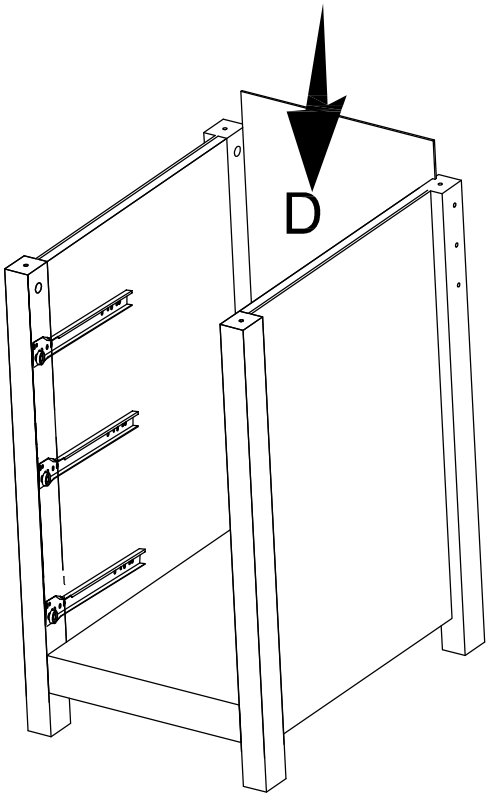

6

Assemble the desk frame.
You will need:

M, N
① x6
② x6
⑥ x2

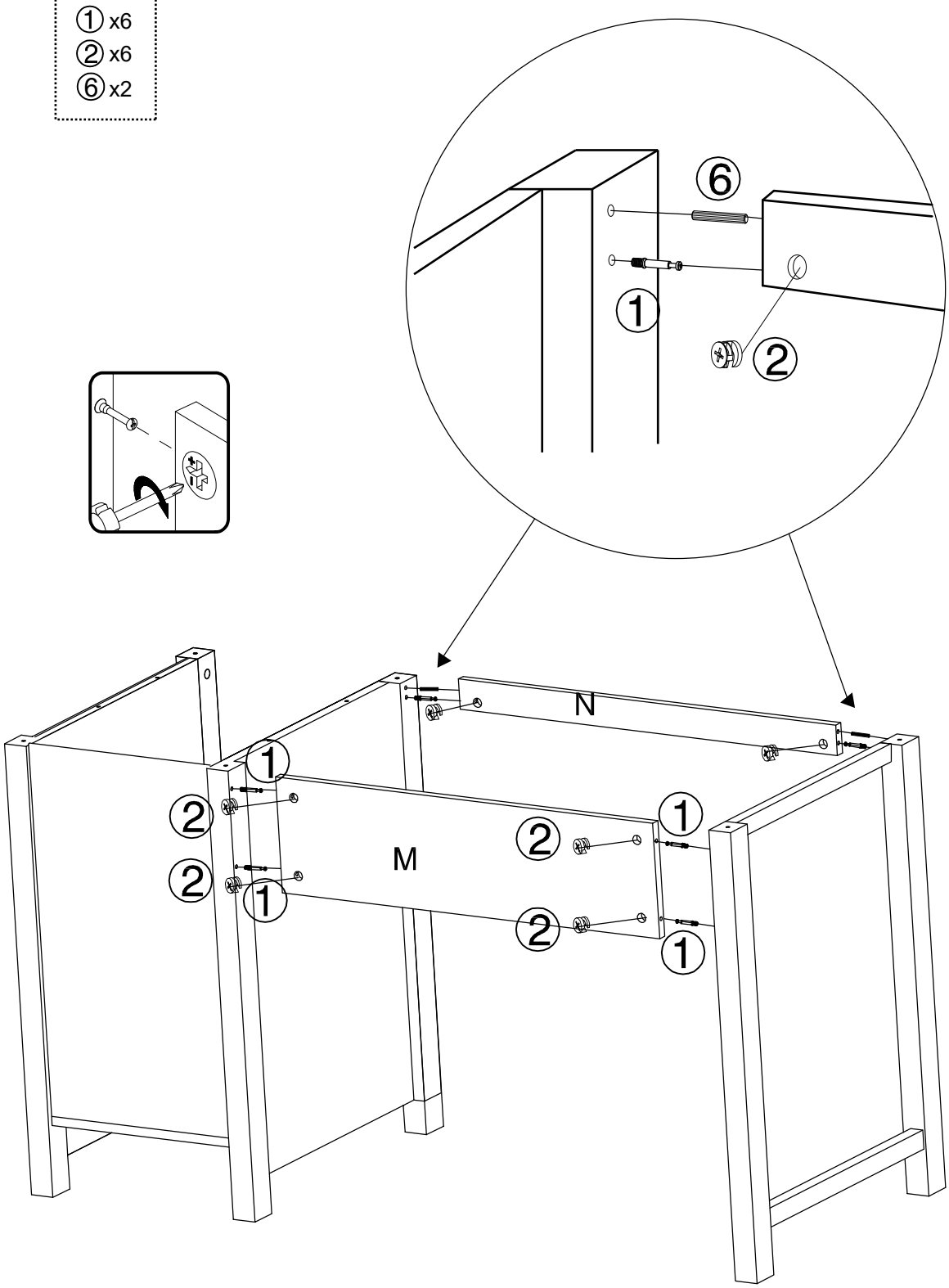

7

Attach the Desktop.
You will need:

A
① x13
② x13
⑥ x6

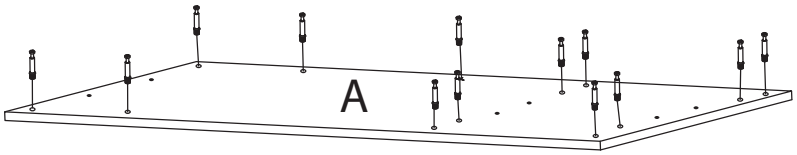

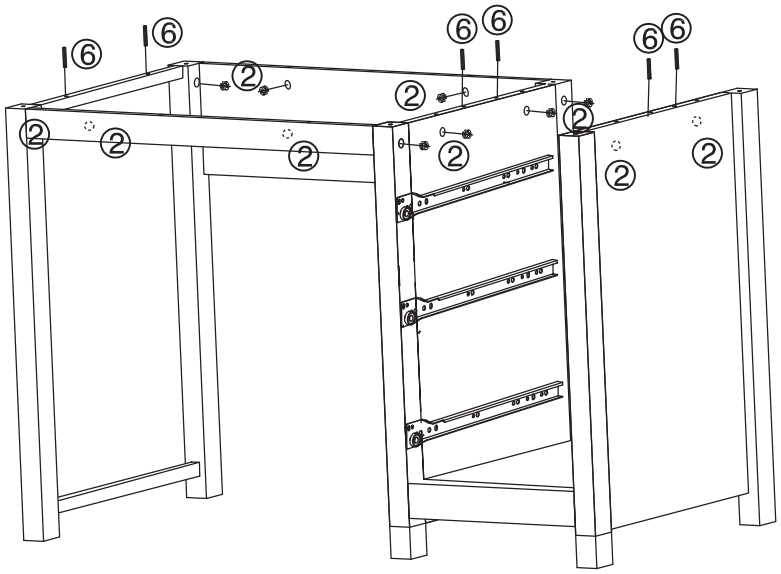

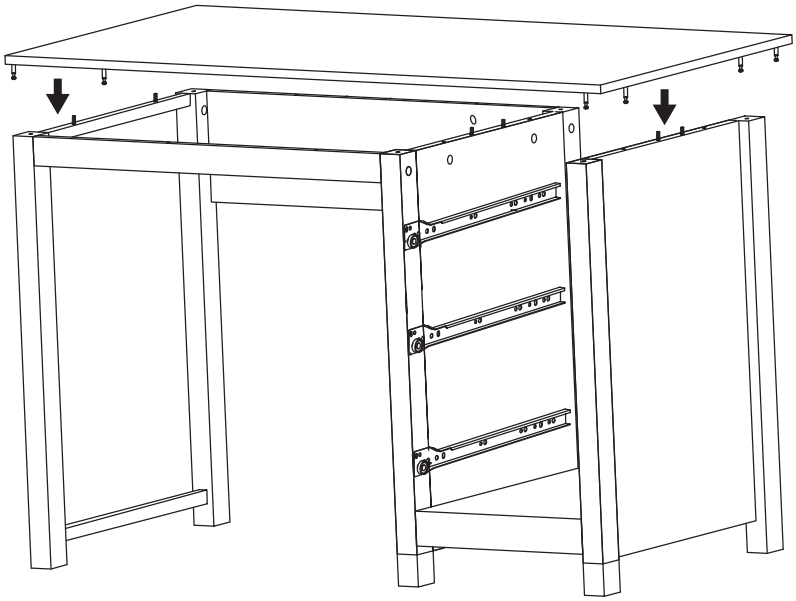

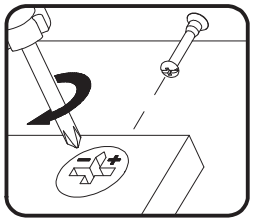

8 Insert drawers.

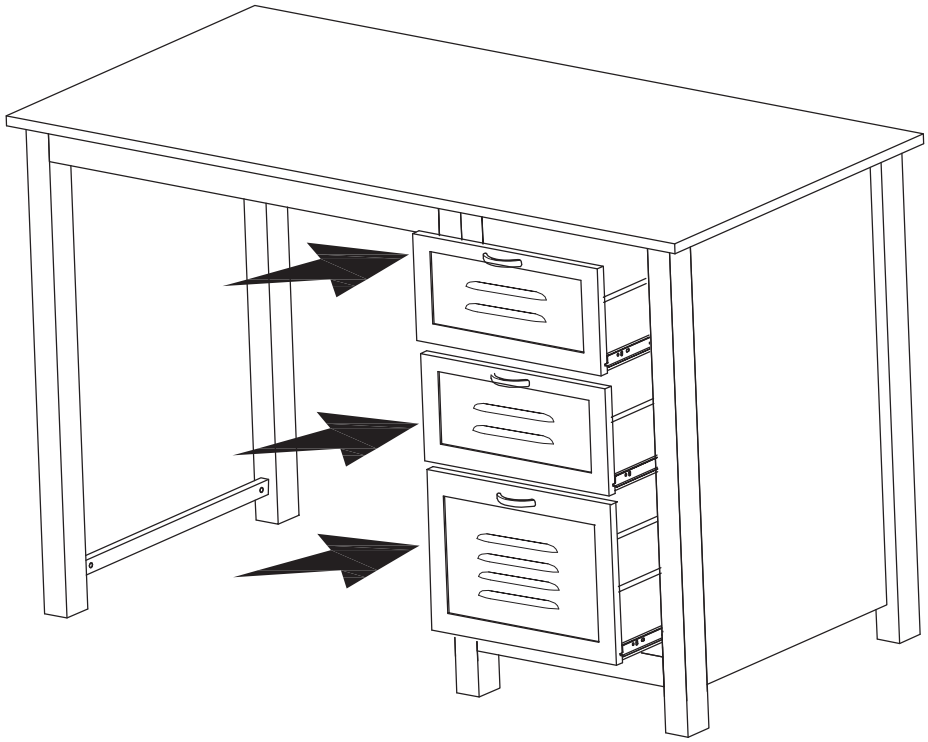

SAFETY AND MAINTENANCE

- DO NOT stand on the table. Do not use the table as a stepladder.
- DO NOT use the table unless all bolts and screws are firmly secured.
- Every 6 months, check all bolts and screws to ensure they are tight.
- This products is California 93120 Compliant for Formaldehyde.

LIMITED WARRANTY

PLEASE VISIT WWW.COMFORTPRODUCTS.NET FOR WARRANTY INFORMATION

Comfort Products warrants this product to be free from defects in material and workmanship for one (1) year. This warranty is made by Comfort Products only to the original end-user customer acquiring the product directly from Comfort Products' authorized dealers as shown by the original sales receipt. The end-user customer remedy pursuant to this warranty is limited to repair or replacement of parts at Comfort Products' option within a reasonable amount of time. Comfort Products reserves the right to require damaged parts to be returned to Comfort Products upon request. Consent from Comfort Products must be obtained before any warranty work is performed. This warranty applies under conditions of normal use and is not subject to defects caused by improper assembly or disassembly; defects occurring after purchase due to product modification, intentional damage, fire, misuse, negligence, or exposure to the elements; labor or assembly cost. This warranty does not cover the cost of transportation or labor. In no event shall Comfort Products be liable in either tort or contract for any loss or direct, special, incidental, consequential or exemplary damages. This Limited Warranty is NOT applicable to end user customers who use Comfort Products for rental purposes. This warranty applies only to end-user customers in the United States. All warranties are limited to the original purchaser for normal use. The weight capacity is defined as 165 pounds (unless otherwise specified). For claims or questions concerning this warranty, please visit www. comfortproducts.net /support. e-mail : customerservice@comfortproducts.net

MODEL:# 50-JN23DSK

Comfort Products, Inc.
122 Gayoso Avenue, Suite 101
Memphis, TN 38103
www.comfortproducts.net
email: customerservice@comfortproducts.net

OneSpace™

OneSpace is a Trademark of Comfort Products, Inc.